2

Proposed Action and No-Action Alternative

TABLE OF CONTENTS

Section Page

2. Proposed Action and No-Action Alternative 2-1

2.1 Proposed Action 2-2
2.1.1 Overview of Implementing Alternatives and Scenarios 2-5
2.1.1.1 Packaging Scenarios 2-7
2.1.1.2 Repository Operating Modes 2-8
2.1.1.2.1 Higher-Temperature Repository Operating Mode 2-10
2.1.1.2.2 Lower-Temperature Repository Operating Mode 2-12
2.1.1.3 National Transportation Scenarios 2-13
2.1.1.4 Nevada Transportation Scenarios and Rail and Intermodal Implementing Alternatives 2-13
2.1.1.5 Continuing Investigation of Design Options 2-14
2.1.2 Repository Facilities and Operations 2-14
2.1.2.1 Repository Surface Facilities and Operations 2-19
2.1.2.1.1 North Portal Operations Area 2-19
2.1.2.1.2 South Portal Development Area 2-25
2.1.2.1.3 Ventilation Shaft Operations Areas 2-25
2.1.2.1.4 Support Facilities and Utilities 2-25
2.1.2.2 Repository Subsurface Facilities and Operations 2-28
2.1.2.2.1 Subsurface Facility Design and Construction 2-28
2.1.2.2.2 Ventilation 2-31
2.1.2.2.3 Waste Package Emplacement Operations 2-32
2.1.2.2.4 Engineered Barrier Design 2-33
2.1.2.3 Performance Confirmation Program 2-39
2.1.2.4 Repository Closure 2-39
2.1.3 Transportation Activities 2-40
2.1.3.1 Loading Activities at Commercial and DOE Sites 2-40
2.1.3.2 National Transportation 2-40
2.1.3.2.1 National Transportation Shipping Scenarios 2-46
2.1.3.2.2 Mostly Legal-Weight Truck Shipping Scenario 2-47
2.1.3.2.3 Mostly Rail Shipping Scenario 2-47
2.1.3.3 Nevada Transportation 2-48
2.1.3.3.1 Nevada Legal-Weight Truck Scenario 2-51
2.1.3.3.2 Nevada Rail Scenario 2-51
2.1.3.3.3 Nevada Heavy-Haul Truck Scenario 2-54
2.1.3.4 Shipping Cask Manufacturing, Maintenance, and Disposal 2-59
2.1.4 Alternative Design Concepts and Design Features 2-61
2.1.4.1 Design Features and Alternatives To Control the Thermal/Moisture Environment in the Repository and To Limit Release and Transport of Radionuclides 2-61
2.1.4.2 Design Features and Alternatives to Support Operational and Cost Considerations 2-62
2.1.5 Estimated Costs Associated with the Proposed Action 2-63

2.2 No-Action Alternative 2-64
2.2.1 Yucca Mountain Site Decommissioning and Reclamation 2-65

Section Page
2.2.2 Continued Storage of Spent Nuclear Fuel and High-Level Radioactive Waste at Commercial and DOE Sites ... 2-65
2.2.2.1 Storage Packages and Facilities at Commercial and DOE Sites ... 2-65
2.2.2.2 No-Action Scenario 1 ... 2-70
2.2.2.3 No-Action Scenario 2 ... 2-70
2.2.3 No-Action Alternative Costs ... 2-72

2.3 Alternatives Considered but Eliminated from Detailed Study ... 2-72
2.3.1 Alternatives Addressed Under the Nuclear Waste Policy Act ... 2-73
2.3.2 Repository Design Alternatives Eliminated from Detailed Study ... 2-73
2.3.3 Transportation Alternatives Eliminated from Detailed Study ... 2-74
2.3.3.1 Potential Rail Routes Considered but Eliminated from Further Detailed Study ... 2-74
2.3.3.2 Potential Highway Routes for Heavy-Haul Trucks and Associated Intermodal Transfer Station Locations Considered but Eliminated from Further Detailed Study ... 2-76

2.4 Summary of Findings and Comparison of the Proposed Action and the No-Action Alternative ... 2-78
2.4.1 Comparison of Proposed Action and No-Action Alternative ... 2-78
2.4.2 Short-Term Impacts of The Proposed Action Repository Construction, Operation and Monitoring, and Closure and No-Action Alternative ... 2-83
2.4.3 Long-Term Impacts of the Proposed Action and the No-Action Alternative ... 2-85
2.4.4 Impacts of Transportation Scenarios ... 2-86
2.4.4.1 National Transportation ... 2-86
2.4.4.2 Nevada Transportation ... 2-87

2.5 Collection of Information and Analyses ... 2-88
2.5.1 Incomplete or Unavailable Information ... 2-94
2.5.2 Uncertainty ... 2-94
2.5.3 Opposing Views ... 2-94
2.5.4 Perceived Risk and Stigma ... 2-95

2.6 Preferred Alternative ... 2-96

References ... 2-98

LIST OF TABLES

Table Page
2-1 Packaging scenarios ... 2-8
2-2 Summary of key underground design and operating parameters associated with repository operating modes analyzed in the EIS ... 2-9
2-3 National transportation scenarios ... 2-46
2-4 Nevada transportation shipping scenarios ... 2-51
2-5 Proposed Action costs from 2002 to closure ... 2-63
2-6 No-Action Alternative life-cycle costs for 10,000 years ... 2-72
2-7 Impacts associated with the Proposed Action and No-Action Alternative ... 2-79

Table Page
2-8 Health and safety impact comparison of Proposed Action to No-Action Alternative 2-84
2-9 National transportation impacts for the transportation of spent nuclear fuel and high-level radioactive waste for the mostly rail and mostly legal-weight truck scenarios 2-87
2-10 Comparison of impacts for Nevada rail implementing alternatives and for legal-weight truck shipments 2-89
2-11 Comparison of impacts for Nevada heavy-haul truck implementing alternatives and for legal-weight truck shipments 2-91

LIST OF FIGURES

Figure Page
2-1 General activity areas evaluated under the Proposed Action and No-Action Alternative 2-1
2-2 Diagram and location of the proposed repository at Yucca Mountain 2-3
2-3 Sources of spent nuclear fuel and high-level radioactive waste proposed for disposal at the Yucca Mountain Repository 2-4
2-4 Overview flowchart of the Proposed Action 2-6
2-5 Analytical scenarios and implementing alternatives associated with the Proposed Action. 2-7
2-6 Artists's conception of water flow around emplacements for higher- and lower-temperature repository operating modes 2-11
2-7 Surface facilities at the proposed Yucca Mountain Repository 2-16
2-8 Artist's conception of proposed repository facilities 2-17
2-9 Monitored geologic repository range of milestones used for analysis 2-18
2-10 Potential repository surface facilities site plan 2-20
2-11 Key components of Waste Handling Building operations 2-22
2-12 Higher-temperature repository operating mode preclosure ventilation air flow in primary block. 2-26
2-13 Flexible design operating mode repository layout showing possible maximum emplacement drift area 2-29
2-14 Tunnel boring machine. 2-30
2-15 Waste package for commercial spent nuclear fuel 2-34
2-16 Drip shield and waste package containing commercial spent nuclear fuel with drip shields in place. 2-35
2-17 Typical section of emplacement drift with waste packages and drip shields in place 2-37
2-18 Waste package on an emplacement pallet 2-38
2-19 Emplacement pallet 2-38
2-20 Artist's conception of a truck cask on a legal-weight tractor-trailer truck 2-41
2-21 Artist's conception of a large rail cask on a railcar 2-41
2-22a Commercial and DOE sites and Yucca Mountain in relation to the U.S. Interstate Highway System 2-42
2-22b Representative truck routes from commercial and DOE sites to Yucca Mountain analyzed for the Proposed Action 2-43
2-23a Commercial and DOE sites and Yucca Mountain in relation to the U.S. railroad system 2-44
2-23b Representative rail routes from commercial and DOE sites to Yucca Mountain analyzed for the Proposed Action 2-45

Figure		Page
2-24	Potential Nevada routes for legal-weight truck shipments of spent nuclear fuel and high-level radioactive waste to Yucca Mountain	2-49
2-25	Existing Nevada rail lines	2-50
2-26	Potential Nevada rail routes to Yucca Mountain	2-52
2-27	Potential intermodal transfer station locations	2-56
2-28	Conceptual diagram of intermodal transfer station layout	2-57
2-29	Artist's conception of a heavy-haul truck carrying a rail shipping cask	2-58
2-30	Potential routes in Nevada for heavy-haul trucks	2-60
2-31	No-Action Alternative activities and analytical scenarios	2-64
2-32	Typical independent spent fuel storage installation	2-67
2-33	Spent nuclear fuel concrete storage module	2-68
2-34	Spent nuclear fuel dry storage canister	2-69
2-35	Conceptual design for solidified high-level radioactive waste storage facility	2-70
2-36	Facility timeline assumptions for No-Action Scenarios 1 and 2	2-71
2-37	Potential rail routes to Yucca Mountain, Nevada, considered but eliminated from further study	2-75
2-38	Potential highway routes for heavy-haul trucks to Yucca Mountain, Nevada, considered but eliminated from further study	2-77

2. PROPOSED ACTION AND NO-ACTION ALTERNATIVE

Under the Proposed Action, the U.S. Department of Energy (DOE) would construct, operate and monitor, and eventually close a geologic repository for the disposal of spent nuclear fuel and high-level radioactive waste at Yucca Mountain (see Section 2.1). The Proposed Action includes transportation of spent nuclear fuel and high-level radioactive waste from commercial and DOE sites to the Yucca Mountain site (see Figure 2-1).

Under the No-Action Alternative (see Section 2.2), DOE would end site characterization activities at Yucca Mountain, and the commercial and DOE sites would continue to manage their spent nuclear fuel and high-level radioactive waste (see Figure 2-1). The No-Action Alternative assumes that spent nuclear fuel and high-level radioactive waste would be treated and packaged as necessary for its safe *onsite* management. DOE does not intend to represent the No-Action Alternative as a viable long-term solution but rather to use it as a basis against which the Proposed Action can be evaluated.

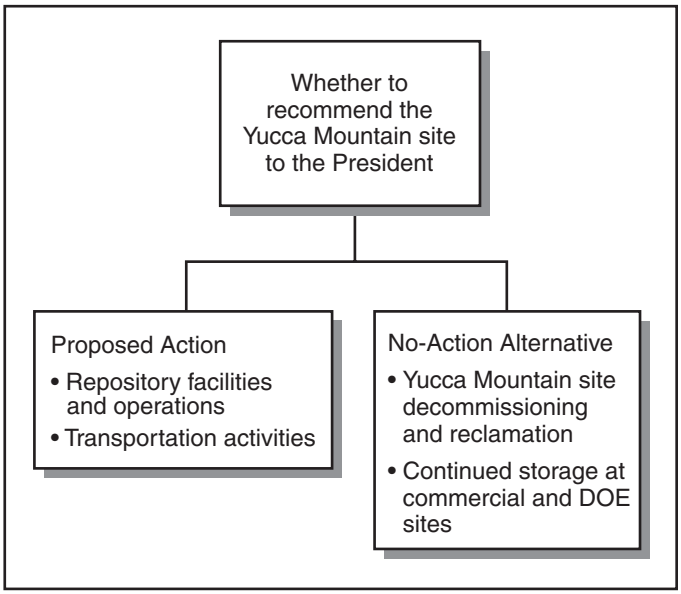

Figure 2-1. General activity areas evaluated under the Proposed Action and No-Action Alternative.

Section 2.3 discusses the alternatives that DOE considered but eliminated from detailed study in this environmental impact statement (EIS). Section 2.4 summarizes findings from the EIS and compares the potential environmental impacts of the Proposed Action and the No-Action Alternative. Section 2.5 addresses the collection of information and analyses performed for the EIS. Section 2.6 identifies the preferred alternative.

DOE has developed the information about the potential environmental impacts that could result from either the Proposed Action or the No-Action Alternative for the Secretary of Energy's consideration, along with other factors required by the Nuclear Waste Policy Act, as amended (NWPA, 42 U.S.C 10101 *et. seq.*), in making a determination on whether to recommend Yucca Mountain as the site of this Nation's first monitored geologic repository for spent nuclear fuel and high-level radioactive waste. In making that determination, the Secretary would consider not only the potential environmental impacts identified in this EIS, but also other factors as provided in the NWPA.

As part of the Proposed Action, the EIS analyzes the potential impacts of transporting spent nuclear fuel and high-level radioactive waste to the Yucca Mountain site from 77 sites across the United States. This analysis includes information on such matters as the impacts of truck and rail transportation nationally and in Nevada, as well as impacts in Nevada of alternative intermodal (rail-to-truck) transfer stations, associated routes for heavy-haul trucks, and alternative corridors for a branch rail line.

DOE believes that the EIS provides the information necessary to make decisions regarding the basic approaches to transportation (for example, rail or truck shipments), as well as the choice among alternative rail corridors in Nevada. However, follow-on implementing decisions, such as selection of a specific rail alignment within a corridor, or the specific location of an intermodal transfer station or the need to upgrade the associated heavy-haul truck routes, would require additional field surveys, State and

local government and Native American tribal consultations, environmental and engineering analyses, and National Environmental Policy Act reviews.

DOE has identified mostly rail as its preferred mode of transportation, both nationally and in the State of Nevada. At this time, the Department has not identified a preference for a specific rail corridor in Nevada. If the Yucca Mountain site was recommended and approved, DOE would identify such a preference in consultation with affected stakeholders, particularly the State of Nevada. In this case, DOE would announce its preferred corridor in a *Federal Register* notice, and would publish its decision to select a corridor in a Record of Decision no sooner than 30 days after the announcement of a preference.

2.1 Proposed Action

DOE proposes to construct, operate and monitor, and eventually close a geologic repository at Yucca Mountain for the disposal of spent nuclear fuel and high-level radioactive waste. In its simplest terms, the proposed repository would be a large underground excavation with a network of *drifts* (tunnels) that DOE would use for spent nuclear fuel and high-level radioactive waste emplacement. About 600 square kilometers (230 square miles or 150,000 acres) of land in Nye County, Nevada, could be permanently withdrawn from public access for repository use. The proposed location of the repository is shown in Figure 2-2. DOE would dispose of spent nuclear fuel and high-level radioactive waste in the repository using the inherent, natural geologic features of the mountain and engineered (manmade) barriers to help ensure the long-term isolation of the spent nuclear fuel and high-level radioactive waste from the human environment. DOE would build the repository emplacement drifts inside Yucca Mountain at least 200 meters (660 feet) below the surface and at least 160 meters (530 feet) above the present-day *water table* (DIRS 154554-BSC 2001, pp. 28 and 29).

Under the Proposed Action, DOE would permanently place approximately 11,000 (DIRS 152010-CRWMS M&O 2000, p. 14) to 17,000 waste packages containing no more than 70,000 metric tons of heavy metal (MTHM) of spent nuclear fuel and high-level radioactive waste in a repository at Yucca Mountain. Of the 70,000 MTHM to be emplaced in the repository, 63,000 MTHM would be spent nuclear fuel assemblies from boiling-water and *pressurized-water reactors* (Figure 2-3) that DOE would ship from commercial nuclear sites to the repository. The remaining 7,000 MTHM would consist of about 2,333 MTHM of DOE spent nuclear fuel and 8,315 canisters (4,667 MTHM) containing solidified high-level radioactive waste (see Figure 2-3) that the Department would ship to the repository from its facilities. The 70,000-MTHM inventory would include surplus weapons-usable plutonium as spent mixed-oxide fuel or immobilized plutonium. Appendix A contains additional information on the inventory and characteristics of spent nuclear fuel, high-level radioactive waste, and other materials that DOE could emplace in the proposed repository. For this EIS, a connected action includes the offsite manufacturing of the containers that DOE would use for the transport and disposal of spent nuclear fuel and high-level radioactive waste and the specialized titanium drip shields and corrosion-resistant emplacement pallets that DOE could install over and under, respectively, the waste packages to improve performance and to reduce *uncertainty* about the long-term performance of the repository.

DEFINITION OF METRIC TONS OF HEAVY METAL

Quantities of spent nuclear fuel are traditionally expressed in terms of *metric tons of heavy metal* (typically uranium), without the inclusion of other materials such as cladding (the tubes containing the fuel) and structural materials. A metric ton is 1,000 kilograms (1.1 tons or 2,200 pounds). Uranium and other metals in spent nuclear fuel (such as thorium and plutonium) are called *heavy metals* because they are extremely dense; that is, they have high weights per unit volume. One metric ton of heavy metal disposed of as spent nuclear fuel would fill a space approximately the size of a typical household refrigerator.

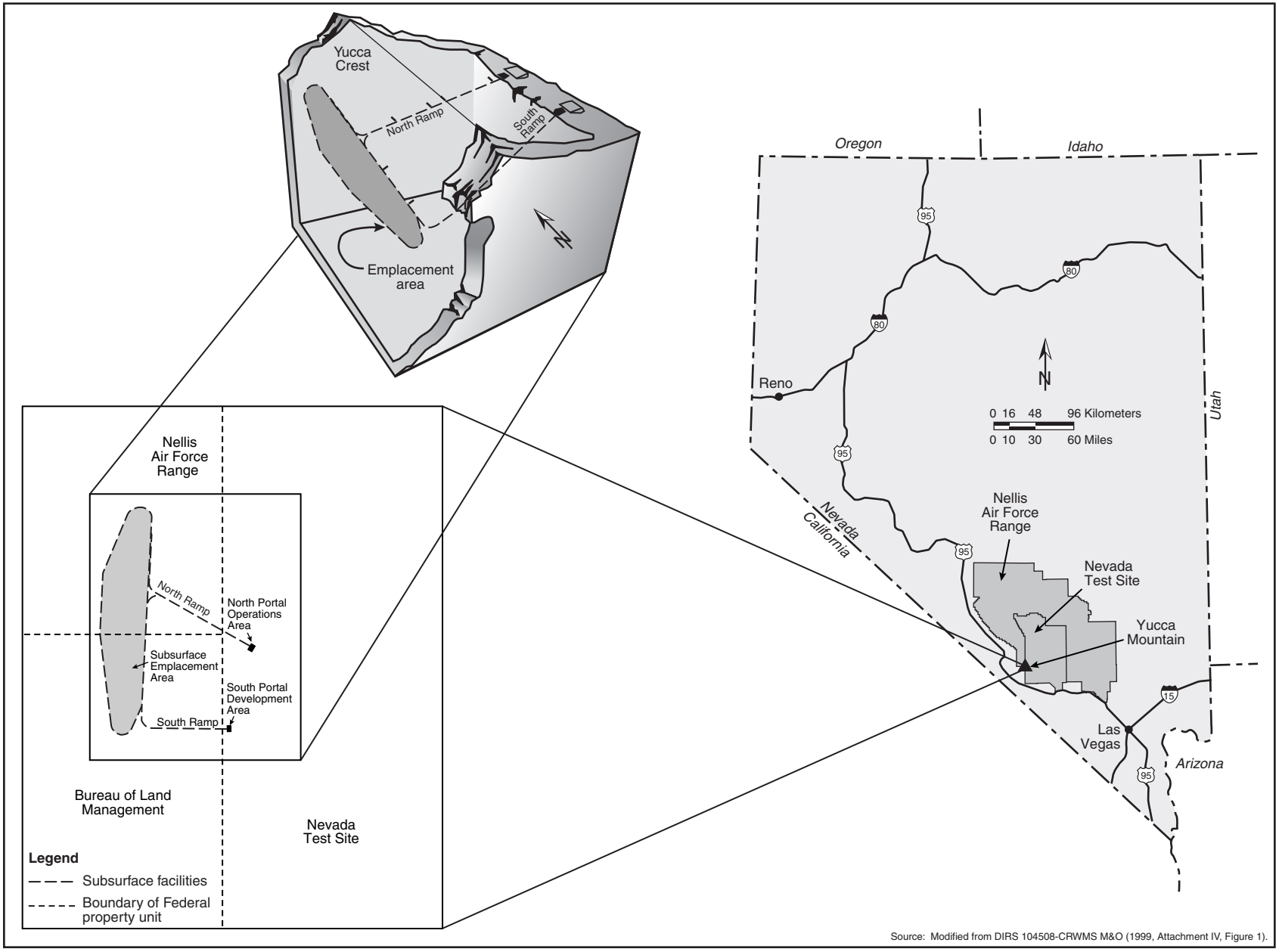

Source: Modified from DIRS 104508-CRWMS M&O (1999, Attachment IV, Figure 1).

Figure 2-2. Diagram and location of the proposed repository at Yucca Mountain.

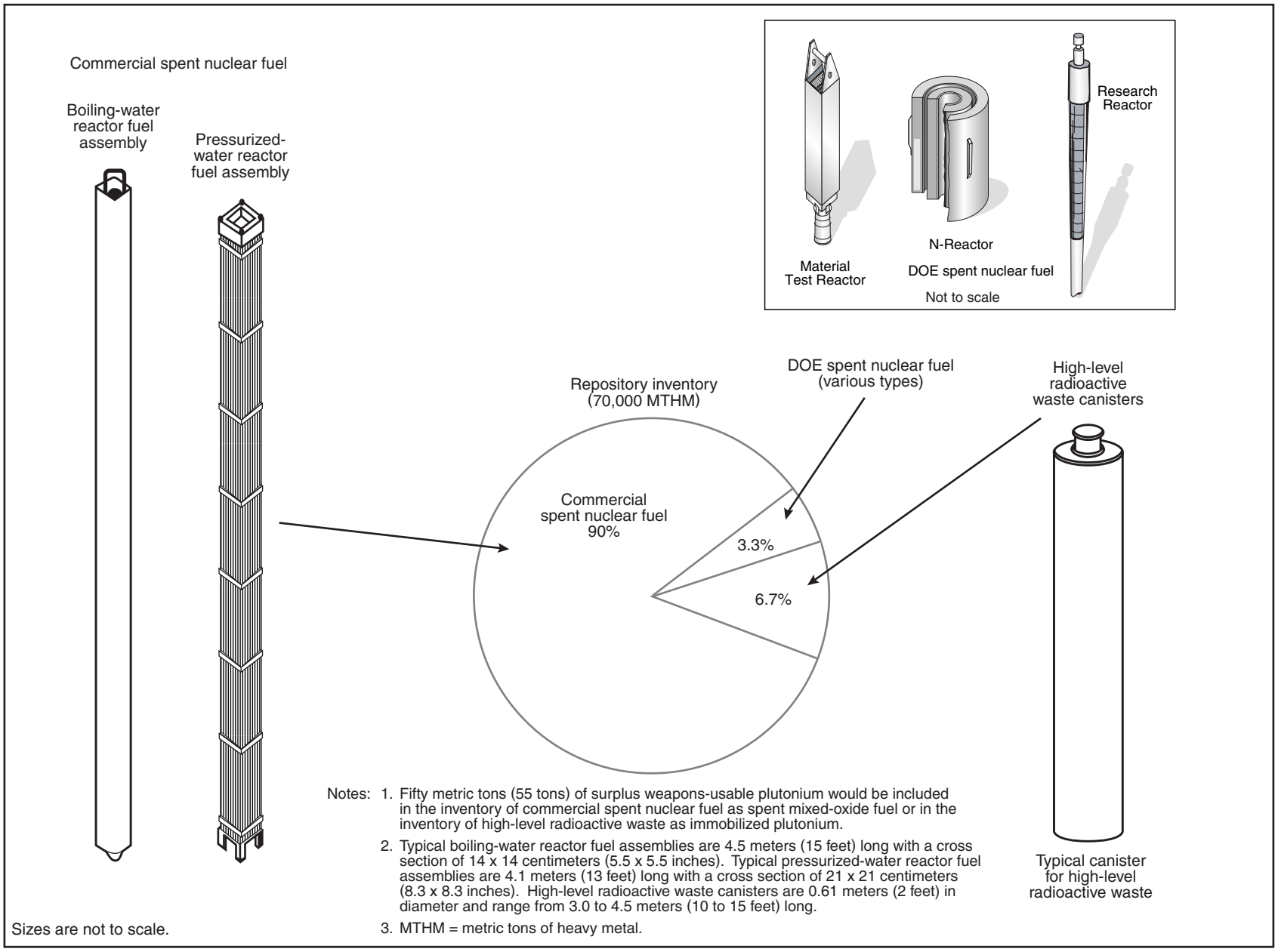

Figure 2-3. Sources of spent nuclear fuel and high-level radioactive waste proposed for disposal at the Yucca Mountain Repository.

Figure 2-4 is an overview of components or activities associated with the Proposed Action. The implementing alternatives and scenarios analyzed in this EIS, as described in Section 2.1.1, represent the potential range of variables associated with implementing the Proposed Action that could affect environmental impacts. The Proposed Action would require surface and subsurface facilities and operations for the receipt, packaging, possible surface *aging*, and emplacement of spent nuclear fuel and high-level radioactive waste (see Section 2.1.2) and transportation of these materials to the repository (see Section 2.1.3). Section 2.1.5 summarizes the estimated cost of the Proposed Action. Chapters 4, 5, and 6 evaluate potential environmental impacts from the Proposed Action. As part of the process to develop implementing concepts, mitigation techniques have been designed into the Proposed Action through the use of best engineering and management practices, as applicable.

The Proposed Action would use two types of institutional controls—active and passive. Active institutional controls (monitored and enforced limitations on site access; inspection and *maintenance* of waste packages, facilities, equipment, etc.) would be used through closure. Passive institutional controls (markers, engineered barriers, etc., that are not monitored or maintained) would be put in place during closure and used to minimize inadvertent exposures to members of the public in the future.

2.1.1 OVERVIEW OF IMPLEMENTING ALTERNATIVES AND SCENARIOS

This EIS describes and evaluates the current preliminary design concept for repository surface facilities, subsurface facilities, and disposal containers (waste packages), and the current plans for the construction, operation and monitoring, and closure of the repository. DOE recognizes that plans for the repository would continue to evolve during the development of the final repository design and as a result of the U.S. Nuclear Regulatory Commission licensing review of the repository. While the design continues to evolve, it is based on decades of similar experience in mining operations and the management of spent nuclear fuel and other radioactive materials, as well as the ongoing site characterization and *performance confirmation* activities and results. In addition, decisions on how spent nuclear fuel and high-level radioactive waste would be shipped to the repository (for example, truck or rail) and how spent nuclear fuel would be packaged (*uncanistered* or in disposable or dual-purpose canisters) would be part of future transportation planning efforts.

DISPOSAL CONTAINERS AND WASTE PACKAGES

A *disposal container* is the vessel consisting of the barrier materials and internal components in which the spent nuclear fuel and high-level radioactive waste would be placed. The filled, sealed, and tested disposal container is referred to as the *waste package*, which would be emplaced in the repository.

For these reasons, DOE developed implementing alternatives and analytical scenarios to bound the environmental impacts likely to result from the Proposed Action in the EIS (see Figure 2-5). The Department selected the implementing alternatives and scenarios to accommodate and maintain flexibility for potential future revisions to the design and operation of the repository. Because of uncertainties, DOE selected implementing alternatives and scenarios that incorporate conservative assumptions that tend to overstate the risks to address those uncertainties.

The following paragraphs describe the packaging scenarios, repository operating modes, national transportation scenarios, Nevada transportation scenarios, and implementing rail and intermodal alternatives evaluated in the EIS.

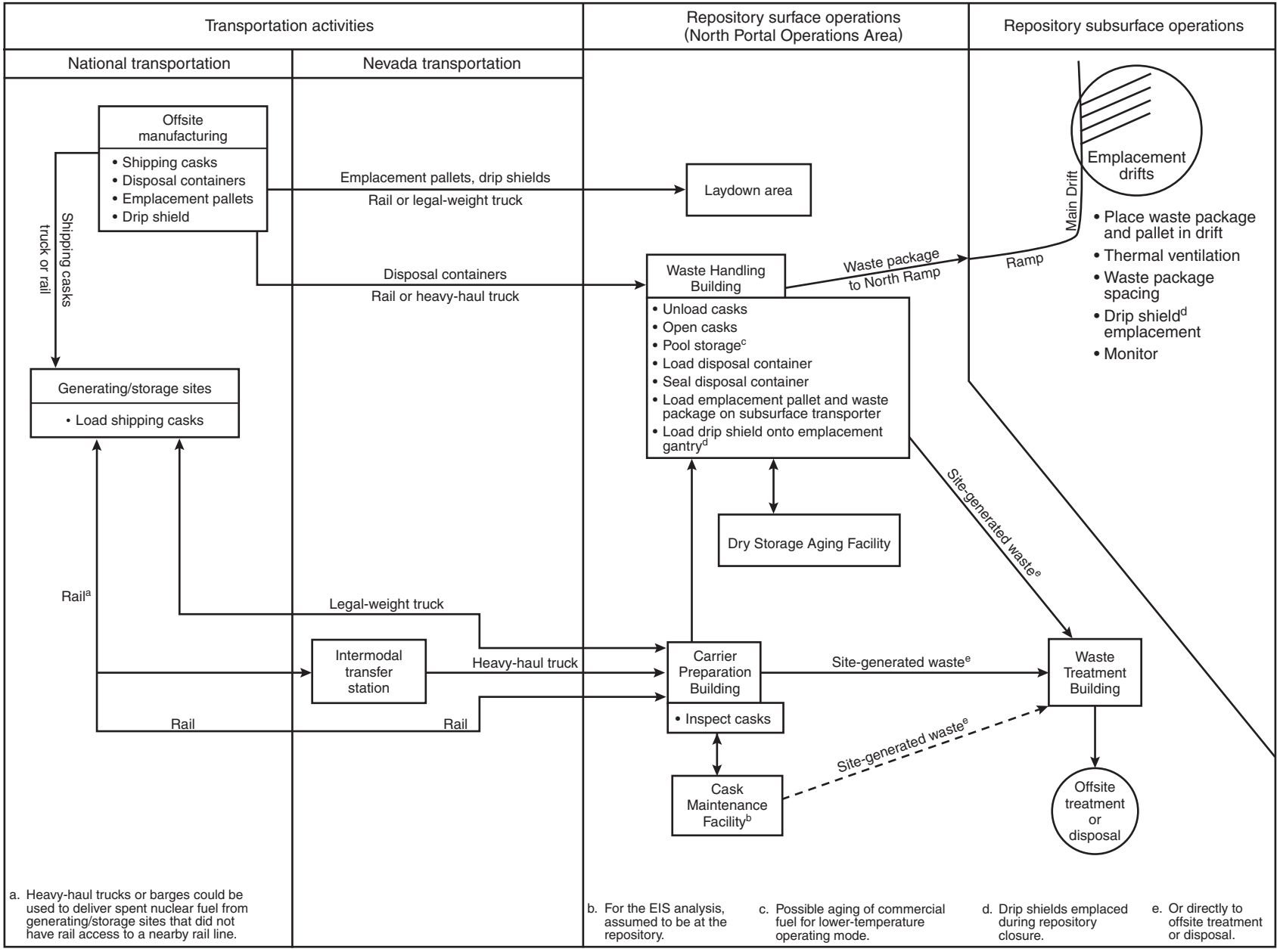

a. Heavy-haul trucks or barges could be used to deliver spent nuclear fuel from generating/storage sites that did not have rail access to a nearby rail line.

b. For the EIS analysis, assumed to be at the repository.

c. Possible aging of commercial fuel for lower-temperature operating mode.

d. Drip shields emplaced during repository closure.

e. Or directly to offsite treatment or disposal.

Figure 2-4. Overview flowchart of the Proposed Action.

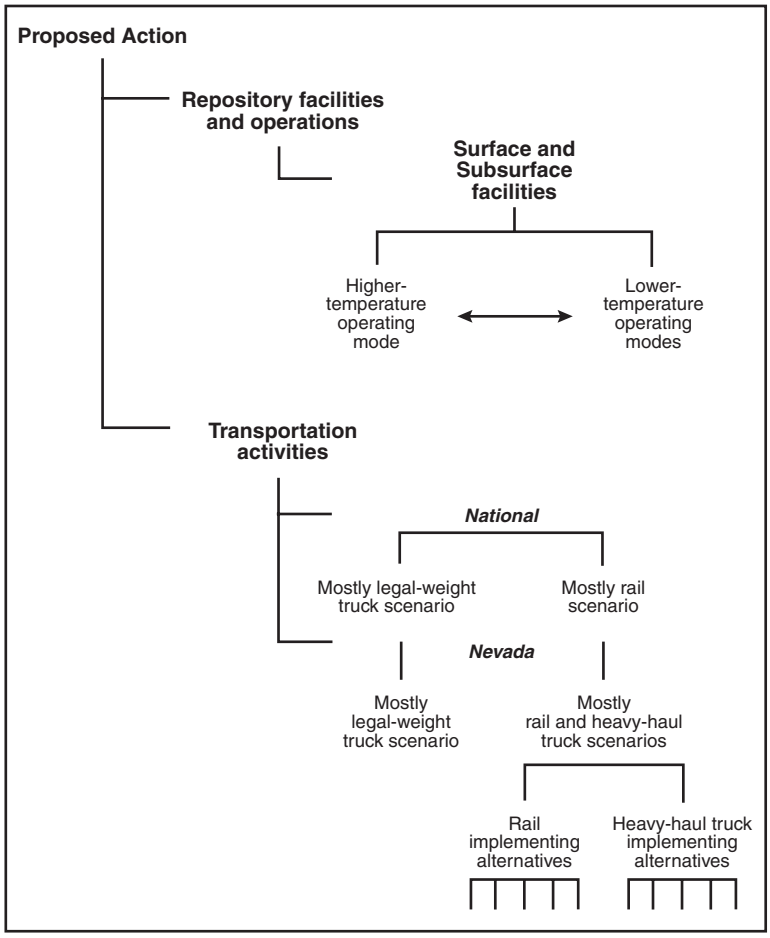

Figure 2-5. Analytical scenarios and implementing alternatives associated with the Proposed Action.

2.1.1.1 Packaging Scenarios

DOE operations at repository surface facilities would differ depending on how the spent nuclear fuel in shipping casks was packaged. Commercial spent nuclear fuel could be received either uncanistered or in disposable or dual-purpose canisters.

The EIS assumes that DOE spent nuclear fuel and high-level radioactive waste would be shipped to the repository in *disposable canisters*. In addition, it evaluates the following packaging scenarios for commercial spent nuclear fuel to cover the potential range of environmental impacts from repository surface facility construction and operation:

- A mostly uncanistered fuel scenario
- A mostly canistered fuel scenario

For this Final EIS, DOE simplified the presentation of the packaging scenarios that were analyzed in the Draft EIS by analyzing only one bounding packaging scenario (the Draft EIS considered both mostly canistered and uncanistered scenarios). DOE was able to simplify the presentation of impacts in the Final EIS because the Draft EIS analysis demonstrated that the mostly uncanistered fuel packaging scenario bounded the analysis in all cases with the exception of (1) the empty dual-purpose canisters that some commercial sites could use that would require disposal or recycling, and (2) some attributes of offsite manufacturing of the disposable canister. The presentation of potential impacts in Chapter 4 of this Final

DEFINITIONS OF PACKAGING TERMS

Shipping cask: A vessel that meets applicable regulatory requirements for shipping spent nuclear fuel or high-level radioactive waste.

Dual-purpose canister: A metal vessel suitable for storing (in a storage facility) and shipping (in a shipping cask) commercial spent nuclear fuel assemblies. At the repository, dual-purpose canisters would be removed from the shipping cask and opened. The spent nuclear fuel assemblies would be removed from the canister and placed in a disposal container or in the fuel pool to accommodate blending. The opened canister would be recycled or disposed of offsite as low-level radioactive waste.

Disposable canister: A metal vessel for commercial or DOE spent nuclear fuel assemblies or solidified high-level radioactive waste suitable for storage, shipping, and disposal. At the repository, the disposable canister would be removed from the shipping cask and placed directly in a disposal container. The disposable canister is sometimes referred to as a multi-purpose canister in discussions of repository design.

Uncanistered spent nuclear fuel: Commercial spent nuclear fuel placed directly into shipping casks. At the repository, spent nuclear fuel assemblies would be removed from the shipping cask and placed in a disposal container or in the fuel pool to accommodate blending.

Disposal container: A container for spent nuclear fuel and high-level radioactive waste consisting of the barrier materials and internal components. The filled, sealed, and tested disposal container is referred to as the *waste package*, which would be emplaced in the repository.

Waste package: The filled, sealed, and tested disposal container that would be emplaced in the repository.

EIS primarily reports impacts associated with the mostly uncanistered scenario. Where the canistered scenario would result in greater impacts (that is, waste management and offsite manufacturing impacts), the greater impacts are provided. Therefore, the scenarios discussed in this Final EIS represent current design concepts and bound the impacts of any canister scenario, including the disposable canister scenario. DOE ultimately might select either scenario. For all scenarios, high-level radioactive waste and DOE spent nuclear fuel remain in the disposable canisters in which they were received for emplacement.

Table 2-1 summarizes these scenarios.

Table 2-1. Packaging scenarios (percentage based on number of shipments).

Material[a]	Mostly uncanistered fuel	Mostly canistered fuel
Commercial SNF	100% uncanistered fuel	About 80% dual-purpose canisters; about 20% uncanistered fuel
HLW	100% disposable canisters	100% disposable canisters
DOE SNF	100% disposable canisters	100% disposable canisters

a. SNF = spent nuclear fuel; HLW = high-level radioactive waste.

2.1.1.2 Repository Operating Modes

The heat generated by spent nuclear fuel and high-level radioactive waste could affect the long-term performance of the repository (that is, the ability of the engineered and natural barrier systems to isolate the emplaced waste from the human environment). Different repository operating modes would have a

direct effect on internal and external waste package temperatures, thereby potentially affecting the corrosion rate and integrity of the waste packages.

Parameters associated with maximum repository temperatures (see Table 2-2) are central to defining the operating modes of the flexible design. The repository temperature would depend on factors related to the design and operation of the repository including, but not limited to, the age and *burnup* of the spent nuclear fuel at the time of emplacement, the spacing of the emplacement drifts and the waste packages in them, and the repository ventilation method and duration. The implementation of these design and operational parameters would affect the short-term environmental impacts of the repository.

Table 2-2. Summary of key underground design and operating parameters associated with repository operating modes analyzed in the EIS.

		Repository operating mode	
Parameter	Unit of measure	Higher-temperature[a]	Lower-temperature[b]
Linear thermal load	Kilowatts per meter	1.42	0.65 to 1[c]
Drift spacing	Meters[d]	81	81[e]
Areal mass load	MTHM[f] per acre	56	25 to 39
Waste package spacing	Meters	0.1	0.1 to 6.4[e]
Emplacement duration	Years	24	24 (50)[g]
Preclosure ventilation duration[h]	Years	100	149 to 324
Closure duration	Years	10	11 to 17
Ventilation rate (forced)	Cubic meters[i] per second in drift	15	15
External ventilation shafts (emplacement and development)	Number	7	9 to 17
Dependent parameter			
Underground area	Square kilometers	4.7	6.5 to 10.1
Total excavated repository volume[j]	Millions of cubic meters	4.4	5.7 to 8.8
Waste packages	Number (in thousands)	11 to 12	11 to 17

a. Source: DIRS 150941-CRWMS M&O (2000, all).
b. Sources: DIRS 152003-McKenzie (2000, all); DIRS 153849-DOE (2001, all).
c. If commercial SNF is aged, linear thermal loads will be lower.
d. To convert meters to feet, multiply by 3.2808.
e. Drift spacing and waste package spacing determine various areal mass loads.
f. MTHM = metric tons of heavy metal.
g. The lower-temperature repository operating mode analysis assumed that waste emplacement with commercial spent nuclear fuel aging would occur over a 50-year period for scenarios that used aging at the repository.
h. From start of emplacement to start of repository closure.
i. To convert cubic meters to cubic feet, multiply by 35.314.
j. Includes existing Exploratory Studies Facility volume of 420,000 cubic meters (15 million cubic feet).

The basis for the three thermal load scenarios in the Draft EIS was the amount of commercial spent nuclear fuel that DOE would emplace per unit area of the repository (areal mass loading). These scenarios included a relatively high emplacement density of commercial spent nuclear fuel (high thermal load – 85 MTHM per acre), a relatively low emplacement density (low thermal load – 25 MTHM per acre), and an emplacement density between the high and low thermal loads (intermediate thermal load – 60 MTHM per acre).

Rather than focusing on thermal loads, the flexible design focuses on controlling the temperature of the rock between the drifts, and on the surface of the waste package and drift walls. The flexible design uses a *linear thermal load* (heat output per unit length of the emplacement drift) and emplaces waste packages closer together than the Draft EIS design. Linear thermal load is expressed in terms of kilowatts per meter.

The design discussed in the *Yucca Mountain Science and Engineering Report: Technical Information Supporting Site Recommendation Consideration* (DIRS 153849-DOE 2001, all) includes the ability to

operate the repository in a range of modes that address higher and lower temperatures. *Higher-temperature* means that at least a portion of the emplacement drift rock wall would have a maximum temperature above the boiling point of water at the elevation of the repository [96°C (205°F)]. The *lower-temperature* operating mode ranges include conditions under which the drift rock wall temperatures would be below the boiling point of water, and conditions under which waste package surface temperatures would not exceed 85°C (185°F).

To construct the analytical basis for evaluation of repository impacts, DOE used widely accepted analytical tools, coupled with the best available information, and cautious but reasonable assumptions where uncertainties exist, to estimate potential environmental impacts. This included applying conservative assumptions to the set of reasonable operating scenarios identified in the Science and Engineering Report (DIRS 153849-DOE 2001, p. 2-24) to ensure that the EIS did not underestimate potential environmental impacts and to accommodate the greatest range of potential future actions.

DOE has established parameters for the range of potential repository operating modes and has identified these parameters and their ranges in Table 2-2. These operating modes provide the basis for evaluation of the environmental impacts described in Chapter 4. The key to ensuring that the range of potential impacts evaluated fully encompasses the impacts that could occur under any reasonable repository mode of operation requires a basic understanding of how the particular impacts relate to the various parameters, particularly those parameters that could be varied to achieve lower-temperature operation.

As shown in the Draft EIS and the Supplement to the Draft EIS, the short-term impacts (preclosure) would increase with the size of the repository emplacement area and surface facilities. The smallest repository and surface facilities are associated with the higher-temperature repository operating mode and therefore would result in the lowest short-term environmental impacts. As detailed in Section 2.1.1.2.2, the lower-temperature repository operating mode would be achieved by varying several of the design parameters independently or in combination, for differing effects. Design parameters include waste package loading, repository ventilation duration, and waste package spacing. In the analyses, DOE maximized each of these parameters in turn, and assumed reasonably conservative values for the other dependent parameters to evaluate the full range of potential environmental impacts. As an example, DOE considered a repository with the largest waste package spacing (6.4 meters), with and without the use of surface aging. The result was the largest repository emplacement area and surface facilities and therefore the highest potential impacts for some *environmental resource areas* (for example, land disturbance, nonradiological air quality, and water use). Conversely, when DOE assumed the long postemplacement ventilation period (up to 300 years), with and without the surface aging facility, the result was a repository that would be open for a longer period with higher potential for impacts to workers and release of naturally occurring radon from the open repository to the offsite public. DOE evaluated the reasonable combinations of these variable design parameters to establish the range of impacts reported in Chapter 4 and summarized in Section 2.4.

2.1.1.2.1 *Higher-Temperature Repository Operating Mode*

The higher-temperature repository operating mode would ensure that a portion of the rock between the drifts would have maximum temperatures below the boiling point of water [96°C (205°F)] (DIRS 153849-DOE 2001, Section 2.1.2) at the elevation of the emplacement horizon (see Figure 2-6). This would allow any water mobilized by the higher-temperature conditions in the drifts to drain between the drifts. The development of a localized boiling region around each emplacement drift, rather than a single boiling region encompassing all the emplacement drifts, would ensure that very little water would be able to accumulate above any emplacement drift. This would substantially decrease the likelihood of water penetrating the emplacement drifts by means of fast paths such as fractures. The higher-temperature operating mode is based on this heat management criterion to keep boiling temperatures from spreading

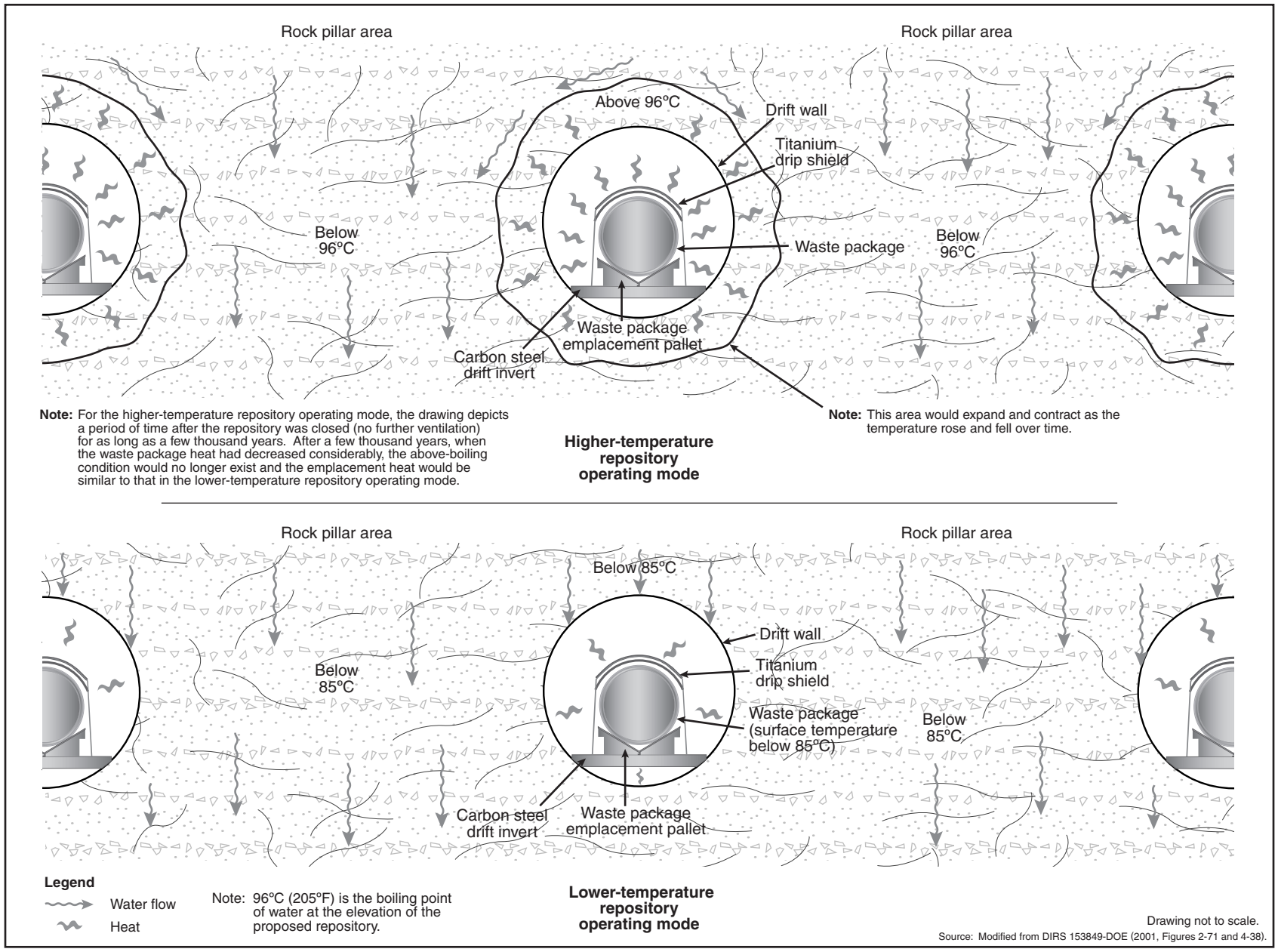

Figure 2-6. Artist's conception of water flow around emplacements for higher- and lower-temperature repository operating modes.

all the way through the rock between drifts after closure, while allowing repository closure as early as 50 years after the start of emplacement.

2.1.1.2.2 *Lower-Temperature Repository Operating Mode*

DOE could operate the repository in a lower-temperature mode by varying certain operational parameters. The lower-temperature operating mode range includes conditions under which the drift rock wall temperatures would be below the boiling point of water [96ºC (205ºF)] at the elevation of the repository, as well as conditions under which waste package average surface temperatures would not exceed 85ºC (185ºF) (see Figure 2-6).

DOE is considering the lower-temperature operating mode to reduce some of the uncertainties associated with assessing long-term repository performance. Lower temperatures might have less effect on rock properties and geochemistry, thereby reducing the complexities in modeling thermal effects. This, in turn, could reduce uncertainties in assessments of future repository performance. Lower in-drift temperatures could also reduce the potential for waste package corrosion.

The primary variables governing a lower waste package surface temperature and the thermal response of the surrounding rock would be the heat generation rate of the waste packages, the linear spacing of the waste packages in the emplacement drifts, and the rate and duration of ventilation after waste package emplacement in the drifts. Operational parameters that DOE could use (independently or in combination) to control repository temperatures (waste package, drift wall, and the overall repository) include (1) varying the waste package *thermal loading* to control the thermal output, (2) varying the duration of the preclosure ventilation period with 15-cubic-meter (530-cubic-foot)-per-second average drift ventilation, and (3) varying the distances between waste packages in the emplacement drifts (DIRS 153849-DOE 2001, Section 2.1.4). The operational parameters would work in combination to control the maximum waste package surface temperature and, thus, the heat transferred to the emplacement drift walls. DOE could use a combination of the three to maximize repository operational efficiency and achieve thermal objectives, as described below.

- *Waste Package Thermal Loading (including surface aging).* Commercial spent nuclear fuel would be the major contributor of heat in the repository. It would have a wide range of thermal outputs. The thermal output of the waste packages could be reduced, however, by varying waste package loading. Waste package thermal loading could be varied by (1) placing low-heat-output (older) fuel with high-heat-output (younger) fuel in the same waste package (fuel *blending*), (2) limiting the number of spent nuclear fuel assemblies to less than the waste package design capacity (derating), (3) using smaller waste packages, or (4) placing younger fuel in a surface aging area to allow its heat output to dissipate so it could meet thermal goals for later emplacement. Section 2.1.2.1.1.2 describes the fuel blending process further. Reducing the thermal output of the waste packages through any of these means would achieve lower waste package and drift wall temperatures. DOE would consider aging as much as two-thirds of the commercial spent nuclear fuel (DIRS 152007-Mattsson 2000, p. 2) during a 50-year period. Aging would require an extended emplacement period.

- *Drift Ventilation Duration.* During repository operations, forced-air (active) or natural (passive) ventilation of the loaded drifts would remove an appreciable part of the heat generated by the waste packages. DOE could reduce the amount of heat delivered to, and thus the maximum temperatures in, the host rock by extending the drift ventilation period with either active or passive ventilation. This could require an extended ventilation period of as long as 300 years after final emplacement to ensure that postclosure temperatures (waste package surface and drift wall) remained below specified goals (DIRS 153849-DOE 2001, Section 2.1.5.2, Table 2-2).

- *Distance Between Waste Packages.* The distance between waste packages in emplacement drifts is another operational variable that DOE could use to manage the thermal response of the repository. With waste packages spaced farther apart, the linear thermal load in each drift would decrease, delivering less heat per unit length of the emplacement drift. Implementing an increase in average waste package spacing would require more emplacement drifts and potentially additional subsurface *infrastructure* than the higher-temperature repository operating mode. Under the lower-temperature repository operating mode, waste package spacing could vary from 0.1 meter (0.33 foot) (DIRS 153849-DOE 2001, Section 2.1.2.2) to 6.4 meters (21 feet) (DIRS 152003-McKenzie 2000, Option 1, p. 2).

These three operational parameters are interrelated; that is, they would work together to achieve the desired result. For example, a combination of 2.1-meter (6.9-foot) waste package spacing, surface aging of commercial spent nuclear fuel, and 125 years of forced-air ventilation (from the start of emplacement) would be adequate to achieve the repository lower-temperature thermal objectives. Another example would be a combination of 2-meter (6.6-foot) waste package spacing, no surface aging, and 75 years of forced-air ventilation (from the start of emplacement) followed by 250 years of *natural ventilation* (DIRS 153849-DOE 2001, Section 2.1.5.2, Table 2-2).

2.1.1.3 National Transportation Scenarios

The national transportation scenarios evaluated in this EIS encompass the transportation options or modes (legal-weight truck and rail) that are practical for DOE to use to ship spent nuclear fuel and high-level radioactive waste from the commercial and DOE sites to the Yucca Mountain site. DOE would use both legal-weight truck and rail transportation, and would determine the number of shipments by either mode as part of future transportation planning efforts. Therefore, the EIS evaluates two national transportation scenarios (mostly legal-weight truck and mostly rail) that cover the possible range of transportation impacts to human health and the environment.

TERMS ASSOCIATED WITH TRANSPORTATION

Legal-weight trucks have a gross vehicle weight (both truck and cargo weight) of less than 36,300 kilograms (80,000 pounds), which is the loaded weight limit for commercial vehicles operated on public highways without special state-issued permits. In addition, the dimensions, axle spacing, and, if applicable, axle loads of these vehicles must be in compliance with Federal and state regulations.

An **intermodal transfer station** is a facility for transferring freight from one transportation mode to another (for example, from railcar to truck). In this EIS, intermodal transfer station refers to a facility DOE would use to transfer rail shipping casks containing spent nuclear fuel or high-level radioactive waste from railcars to heavy-haul trucks, and to transfer empty rail shipping casks from heavy-haul trucks to railcars.

Heavy-haul trucks are overweight, overdimension vehicles that must have permits from state highway authorities to use public highways. In this EIS, heavy-haul trucks refers to vehicles DOE would use on public highways to move spent nuclear fuel or high-level radioactive waste shipping casks designed for a railcar.

2.1.1.4 Nevada Transportation Scenarios and Rail and Intermodal Implementing Alternatives

The transportation of spent nuclear fuel and high-level radioactive waste to the proposed repository would affect the states through which the shipments would travel, including Nevada. However, to

highlight the impacts that could occur in Nevada, DOE has chosen to discuss them separately. DOE is looking at three transportation scenarios for Nevada. These scenarios include legal-weight truck and rail, which are the same as the national scenarios but highlight the Nevada portion of the transportation, and heavy-haul truck. The heavy-haul truck scenario includes the construction of an intermodal transfer station with associated highway improvements for heavy-haul trucks in the State. DOE has identified five potential rail corridors leading to Yucca Mountain and three potential intermodal transfer station locations with five associated potential highway routes for heavy-haul trucks. Section 2.1.3.3 describes these implementing alternatives.

2.1.1.5 Continuing Investigation of Design Options

As noted, this EIS describes and evaluates the flexible design concept for the repository and current plans for repository construction, operation and monitoring, and closure (see Section 2.1.2). DOE continues to investigate design options for possible incorporation in the final repository design; Appendix E identifies design features that DOE is considering for the final design (for example, specific design and operational considerations regarding natural ventilation and its duration; consideration of indefinite ventilation period; modular construction of repository facilities; whether to handle commercial spent nuclear fuel using a pool with water or a dry transfer system; and site access road construction). The criteria for selecting these design options are related to improving or reducing uncertainties in repository performance (the potential to provide containment and isolation of radionuclides) and operation (for example, worker and operational safety, ease of operation).

DOE has assessed each of the design options still being considered for the expected change it would have on short- and long-term environmental impacts and has compared these impacts to the potential impacts determined for the packaging, operating mode, and transportation scenarios evaluated in the EIS. This assessment, which is described in Appendix E, found that the changes in environmental impacts for the design options would be relatively minor in relation to the potential impacts evaluated in this EIS. Therefore, DOE has concluded that the analytical scenarios and implementing alternatives evaluated in this EIS provide a representative range of potential environmental impacts the Proposed Action could cause. Chapter 9 discusses mitigation from design options that could be beneficial in reducing impacts associated with repository performance or operation.

2.1.2 REPOSITORY FACILITIES AND OPERATIONS

This section describes proposed repository surface and subsurface facilities and operations (Sections 2.1.2.1 and 2.1.2.2), the performance confirmation program (Section 2.1.2.3), and repository closure (Section 2.1.2.4) . The description is based on the Science and Engineering Report (DIRS 153849-DOE 2001, all) and other engineering data files (DIRS 104508-CRWMS M&O 1999, all; DIRS 104523-CRWMS M&O 1999, all; DIRS 102030-CRWMS M&O 1999, all) unless otherwise noted. The following paragraphs contain an overview of the repository facilities and operations and the sequence of planned repository construction, operation and monitoring, and closure. DOE would design the repository based on the extensive information collected during the Yucca Mountain site characterization activities. These activities are summarized in semiannual site characterization reports. [See the semiannual Site Characterization Progress Reports that the Department prepares in accordance with Section 113(b)(3) of the NWPA (for example, DIRS 155982-DOE 2001, all).] The facilities used for site characterization activities at Yucca Mountain would be incorporated in the repository design to the extent practicable. (See Chapter 3, Section 3.1, for additional information on existing facilities at Yucca Mountain developed during site characterization activities.)

DOE would construct surface facilities at the repository site to receive, prepare, and package spent nuclear fuel and high-level radioactive waste for underground emplacement. In addition, surface

facilities would support the construction of subsurface facilities. These facilities include the following primary surface operations areas:

- North Portal Operations Area – Receive, prepare, and package spent nuclear fuel and high-level radioactive waste for underground emplacement
- South Portal Development Area – Support the construction of subsurface facilities
- Ventilation Shaft Operations Area – Supply air to and exhaust air from the subsurface facilities

Figure 2-7 is an aerial photograph of the Yucca Mountain site showing the locations of these surface facilities. The spent nuclear fuel and high-level radioactive waste would be handled remotely with workers shielded from *exposure* to radiation using design and operations practices in use at licensed nuclear facilities to the maximum extent practicable. The repository operations areas and supporting areas, utilities, roads, etc., would require the active use of as much as 6 square kilometers (1,500 acres) of land. Of this total area, about 1.5 square kilometers (370 acres) have been disturbed by previous activities.

Figure 2-8 shows the subsurface layout of the repository, which would consist of drifts (tunnels) and vertical ventilation shafts that DOE would excavate in the mountain. Along with the main drifts, gently sloping ramps from the surface to the subsurface facilities would move workers, equipment, and waste packages. Waste packages of spent nuclear fuel and high-level radioactive waste would be placed in the emplacement drifts. The ventilation systems would move air for workers and would cool the repository.

The following paragraphs contain an overview of the sequence of repository construction, operation and monitoring, and closure. Figure 2-9 shows the timing assumed for analysis, site recommendation, site designation, licensing review, construction, operation and monitoring, and closure of the proposed repository at Yucca Mountain. If the Yucca Mountain site was recommended for development as a repository, DOE would continue performance confirmation activities to support a License Application to the Nuclear Regulatory Commission in accordance with the NWPA. Performance confirmation activities after Site Recommendation and before the construction of performance confirmation drifts could be similar to activities performed during site characterization. These activities could require surface excavations and borings, subsurface excavations and borings, and in-place testing of rock characteristics.

The construction of repository facilities for the handling of spent nuclear fuel and high-level radioactive waste would begin after the receipt of construction authorization from the Nuclear Regulatory Commission. DOE assumed that construction would begin in 2005. The repository surface facilities, the main drifts, ventilation system, and initial emplacement drifts would be built in approximately 5 years, from 2005 to 2010 (DIRS 153849-DOE 2001, Section 2.3.5.1.1).

Repository operations would begin after DOE received a license amendment from the Nuclear Regulatory Commission to receive and possess spent nuclear fuel and high-level radioactive waste. For analytical purposes, DOE assumed that the receipt and emplacement of these materials would begin in 2010 and would occur over a 24-year period, unless DOE used aging to implement the lower-temperature repository operating mode. With aging, the emplacement period would be 50 years. DOE also assumed that material receipt would occur at a rate of approximately 3,000 MTHM per year. The emplacement rates discussed here are estimated for analytical purposes only, and would need to be refined should a repository be constructed.

The construction of emplacement drifts would continue for 22 years during emplacement, or would continue until near the end of aging if aging was used to achieve the lower-temperature repository operating mode. The repository design would enable simultaneous construction and emplacement

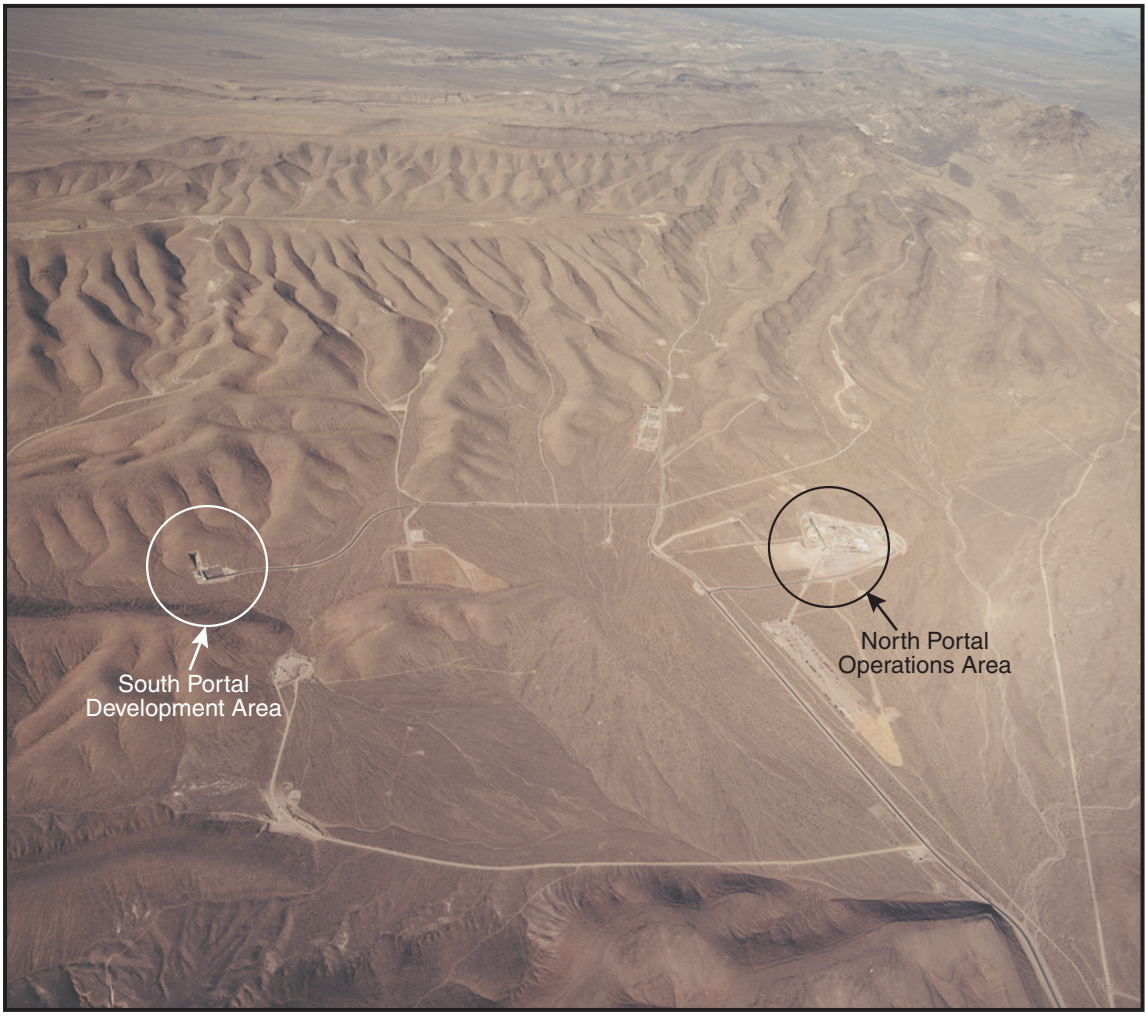

Figure 2-7. Surface facilities at the proposed Yucca Mountain Repository.

operations, and would physically separate activities on the construction or development side of the repository from activities on the emplacement side. This would provide protection of workers and appropriate ventilation of the emplaced waste.

Monitoring and maintenance activities would start with the first emplacement of waste packages and would continue through repository closure. After the completion of emplacement, DOE would maintain those repository facilities, including the ventilation system and utilities (air, water, electric power) that would enable continued monitoring and inspection of the emplaced waste packages, continued investigations in support of estimates of long-term repository performance, and the *retrieval* of waste packages if necessary. Immediately after the completion of emplacement, DOE would decontaminate and close the surface facilities that handled nuclear materials to eliminate any potential radioactive material release and would place surface facilities in a standby condition. That is, they could be reactivated if necessary. DOE would maintain an area in the Waste Handling Building for the possible testing of waste packages as a quality assurance contingency in the performance confirmation program. Future generations would decide whether to continue to maintain the repository in an open, monitored condition or to close it. To ensure flexibility to future decisionmakers, the EIS analyzed the repository with the capability for closure as early as 50 years or as late as 324 years after the start of emplacement based on

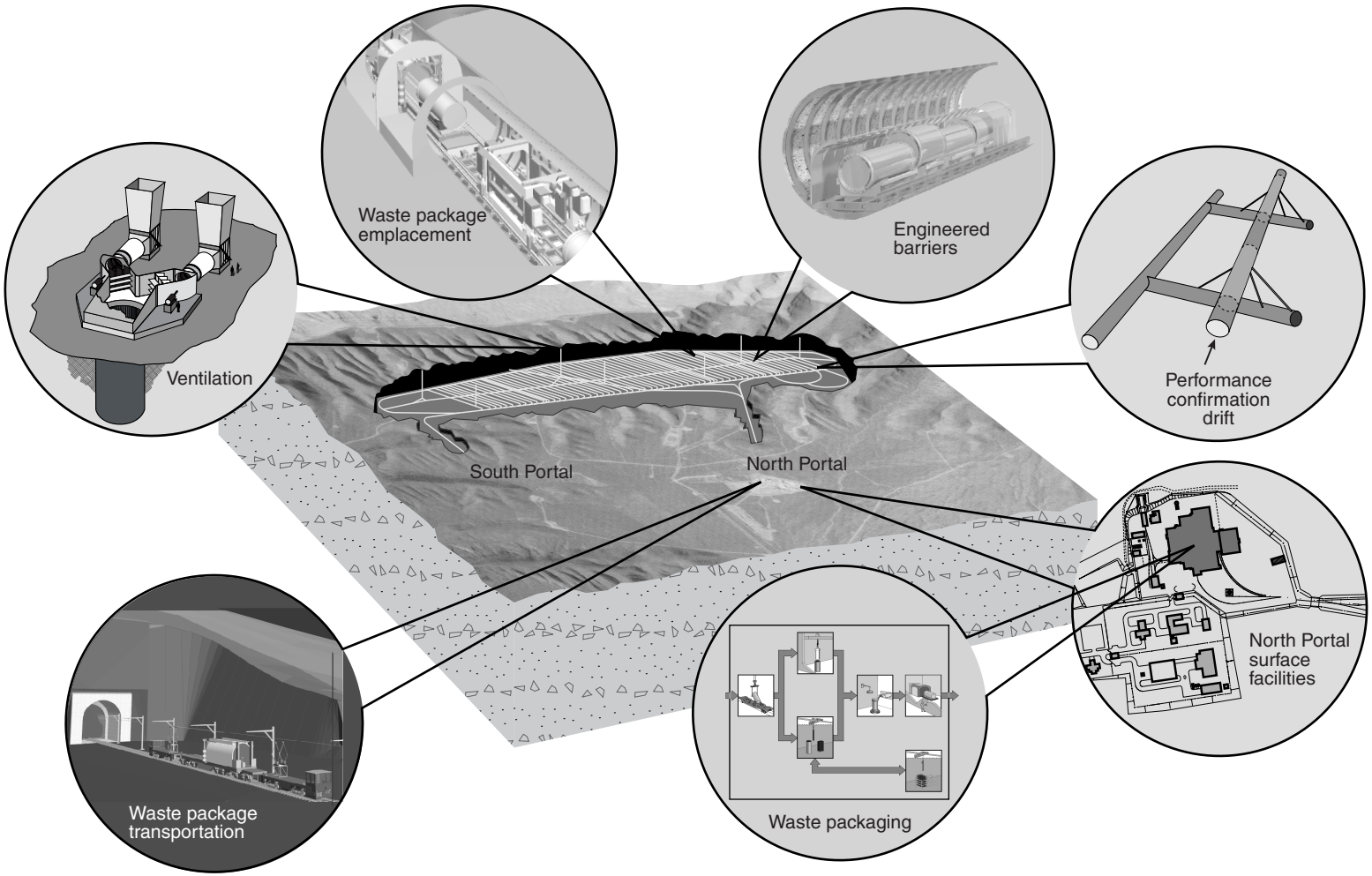

Source: Modified from DIRS 153849-DOE (2001, Figure 2-1).

Figure 2-8. Artist's conception of proposed repository facilities.

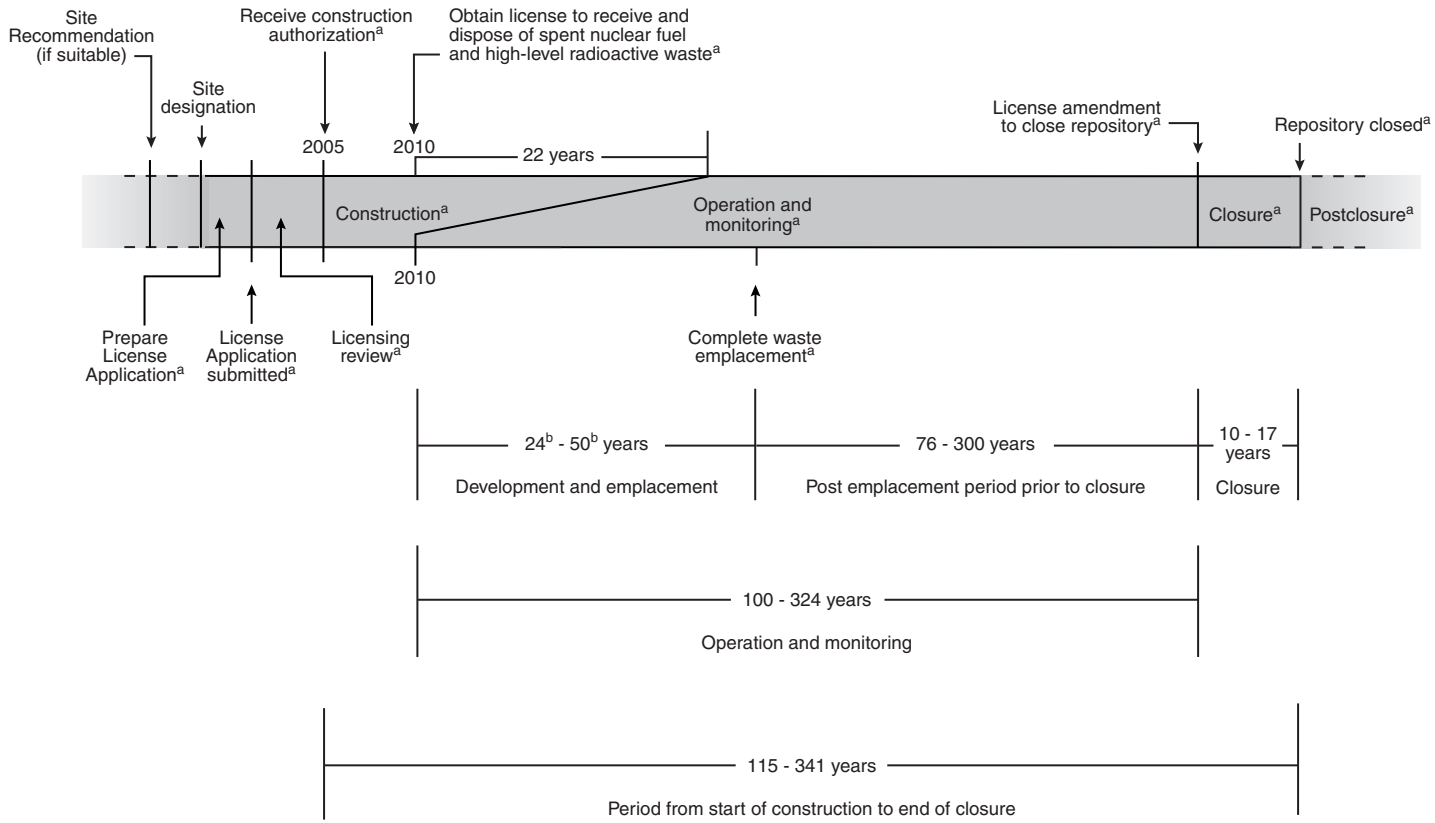

a. If Yucca Mountain is approved.

b. Analysis without aging assumed that waste emplacement would occur over a 24-year period and analysis with aging assumed that waste emplacement with commercial spent nuclear fuel aging would occur over a 50-year period.

Note: See Table 2-2 for range of emplacement, preclosure ventilation, and closure durations.

Sources: Modified from DIRS 104523-CRWMS M&O (1999, Figure 1.5-1, p.1-3).

Figure 2-9. Monitored geologic repository range of milestones used for analysis.

example scenarios in the Science and Engineering Report (DIRS 153849-DOE 2001, Section 2.1.5). As stated in the Science and Engineering Report, for the higher-temperature repository operating mode, the start of closure could occur as early as 50 years after initial emplacement. The EIS analysis of the higher-temperature operating mode assumes that closure would begin 100 years after the start (76 years after the completion) of emplacement to facilitate comparisons. The lower-temperature repository operating mode would require a longer period of ventilation. This EIS evaluates closure of the repository in the lower-temperature mode after forced ventilation for as many as 324 years after the start of emplacement.

The performance confirmation program would continue some of the activities initiated during site characterization until repository closure, including various types of tests, experiments, and analytical procedures. DOE would conduct performance confirmation activities to further evaluate the accuracy and adequacy of the information used to demonstrate compliance that the repository would meet performance objectives.

Throughout the construction, operation, monitoring and maintenance, and closure periods, the repository would remain under effective institutional control. Under institutional control, the repository would be maintained to ensure that workers and the public were protected adequately in compliance with applicable Federal regulations and the requirements in DOE Order 5400.5 “Radiation Protection of the Public and the Environment.”

Repository closure would occur after DOE received a license amendment from the Nuclear Regulatory Commission. Closure would take about 10 years for the higher-temperature repository operating mode (DIRS 150941-CRWMS M&O 2000, p. 6-22), and from 11 to 17 years for the lower-temperature repository operating mode. Closure of the repository facilities would include emplacing the drip shields, closing the subsurface facilities, completely decontaminating and decommissioning the surface facilities, reclaiming the disturbed surface areas, and establishing long-term institutional controls, including land records and warning systems to limit or prevent intentional or unintentional activity in and around the closed repository. DOE would establish a postclosure monitoring program, as required by Section 801(c) of the Energy Policy Act of 1992 (Public Law 102-486, 106 Stat. 2776); the Nuclear Regulatory Commission has regulations (10 CFR Part 63) addressing postclosure monitoring.

2.1.2.1 Repository Surface Facilities and Operations

Surface facilities at the repository site would receive, prepare, stage, and package spent nuclear fuel and high-level radioactive waste for subsurface emplacement. In addition, they would support the construction of the subsurface facilities. DOE would upgrade some surface facilities built for site characterization, but most would be new. Most facilities would be in three areas—the North Portal Operations Area, the South Portal Development Area, and the Ventilation Shaft Operations Areas. Facilities to support waste emplacement would be concentrated near the North Portal, and facilities to support subsurface facility development would be concentrated near the South Portal. The following sections describe these areas in more detail. In addition, Section 2.1.2.1.4 describes support facilities and utilities.

2.1.2.1.1 *North Portal Operations Area*

This area, shown in Figure 2-10, would be the largest of the primary operations areas, covering about 0.6 square kilometer (150 acres) (DIRS 104508-CRWMS M&O 1999, Section 4.2.3.1) at the North Portal. It would include two areas: a *Radiologically Controlled Area* for receipt, handling, and packaging of spent nuclear fuel and high-level radioactive waste prior to emplacement, and a Balance of Plant Area for support services (such as administration, training, and maintenance). The Radiologically Controlled Area would be monitored to ensure adequate safeguards and security for radioactive materials. The two

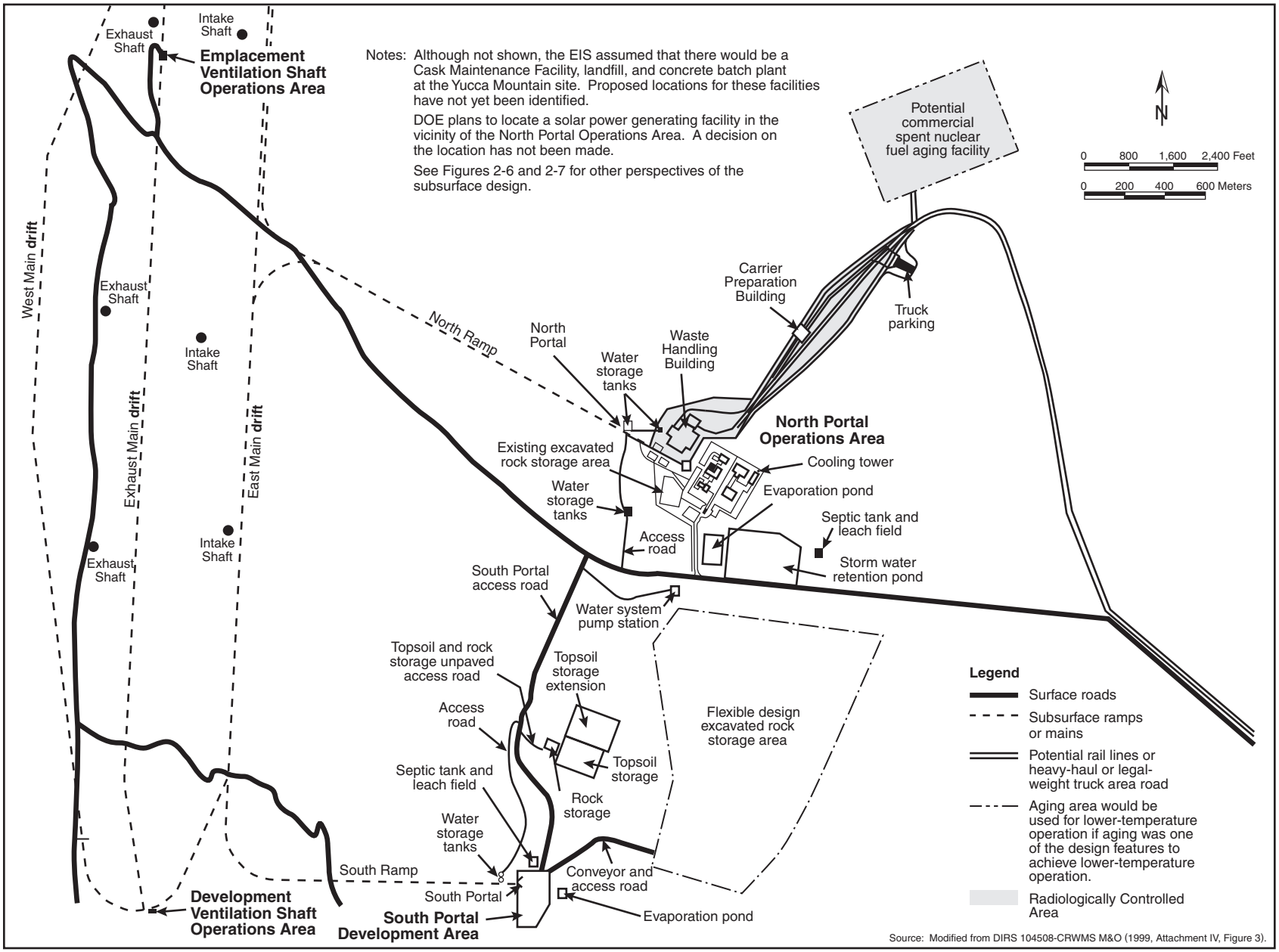

Figure 2-10. Potential repository surface facilities site plan.

principal facilities in the Radiologically Controlled Area for handling spent nuclear fuel and high-level radioactive waste would be the Carrier Preparation Building and the Waste Handling Building. If DOE uses aging to achieve lower-temperature operation, the commercial nuclear fuel aging area would also be included within the Radiologically Controlled Area. Other support facilities in the North Portal Operations Area would include basic facilities for personnel support, warehousing, security, parking and visitors center, and transportation (motor pool). A concrete plant for fabricating and curing precast components and supplying concrete for *in-situ* placement would be near the North Portal Operations Area.

2.1.2.1.1.1 Waste Handling. When a legal-weight or heavy-haul truck or a railcar (depending on the transportation mode) hauling a *cask* containing spent nuclear fuel or high-level radioactive waste arrived at the repository site, it would move through the security check into the Radiologically Controlled Area parking area or to the Carrier Preparation Building. Operations in the Carrier Preparation Building would include performing inspections of the vehicle and cask, removing barriers from the vehicle that protected personnel during shipment, and removing *impact limiters* from the cask. The vehicle would then move to the Waste Handling Building for unloading.

At the Waste Handling Building carrier bay, the carrier/cask handling system would lift the transportation cask to a vertical position and place it on a cask transfer cart. Depending on the cask's contents, the cart would move to one of two transfer systems. Casks that contain disposable canisters (for example, DOE canisters that would not be opened but transferred, as is, directly into a *disposal container*) would go to the canister transfer system. Casks that contain commercial spent nuclear fuel in dual-purpose canisters or individual *fuel assemblies* would go to the assembly transfer system. Figure 2-11 is a flow diagram of Waste Handling Building operations.

The Waste Handling Building would have one canister transfer line that moves the disposable canisters through the building to prepare the waste for emplacement in the repository. The system would move arriving casks through an *air lock* on a transfer cart into a cask preparation area. Once a cask arrived inside the cask preparation area, workers would use remotely operated equipment to vent and sample gases from the cask, remove the lid bolts, and open the cask. An overhead crane would move the cask to a transfer cart, which would take the cask to a shielded transfer area. Inside the transfer area, machines would remove the canister from the cask. The canister could go directly into a disposal container for repository emplacement, or to a holding rack for later placement in a disposal container. Another transfer cart would move loaded disposal containers to the disposal container handling system. A transfer cart would move the empty transportation casks back to the cask *decontamination* area, where they would be surveyed and decontaminated, if required, before return shipment. From the decontamination area, casks would be moved to the carrier/cask handling system, which would place them back on a transporter. The empty cask and cask transporter would return to the Carrier Preparation Building to be readied for offsite shipment.

The Waste Handling Building would also have two assembly transfer lines. Each line would operate independently to handle waste throughput and support maintenance operations. The assembly transfer process would begin by moving the cask on a transfer cart through the air lock into the cask preparation area. Once inside the cask preparation area, workers would use remotely operated equipment to inspect, vent, and cool the cask and remove the cask lid bolts. A large overhead crane would lift the casks and place them in a cask unloading pool, where fuel-handling machines would open the casks and unload the fuel assemblies. If the cask contained dual-purpose canisters, they would be removed and placed in an overpack, where the top of the canister would be cut off. The system would move the empty casks and dual-purpose containers back out through the cask decontamination area. The fuel-handling machines would transfer the fuel assemblies, one at a time, to a holding pool, where they would be placed in assembly baskets. A transfer cart would move the baskets containing the fuel assemblies underwater from the assembly holding pool through a transfer canal to a fuel-blending inventory pool. (See

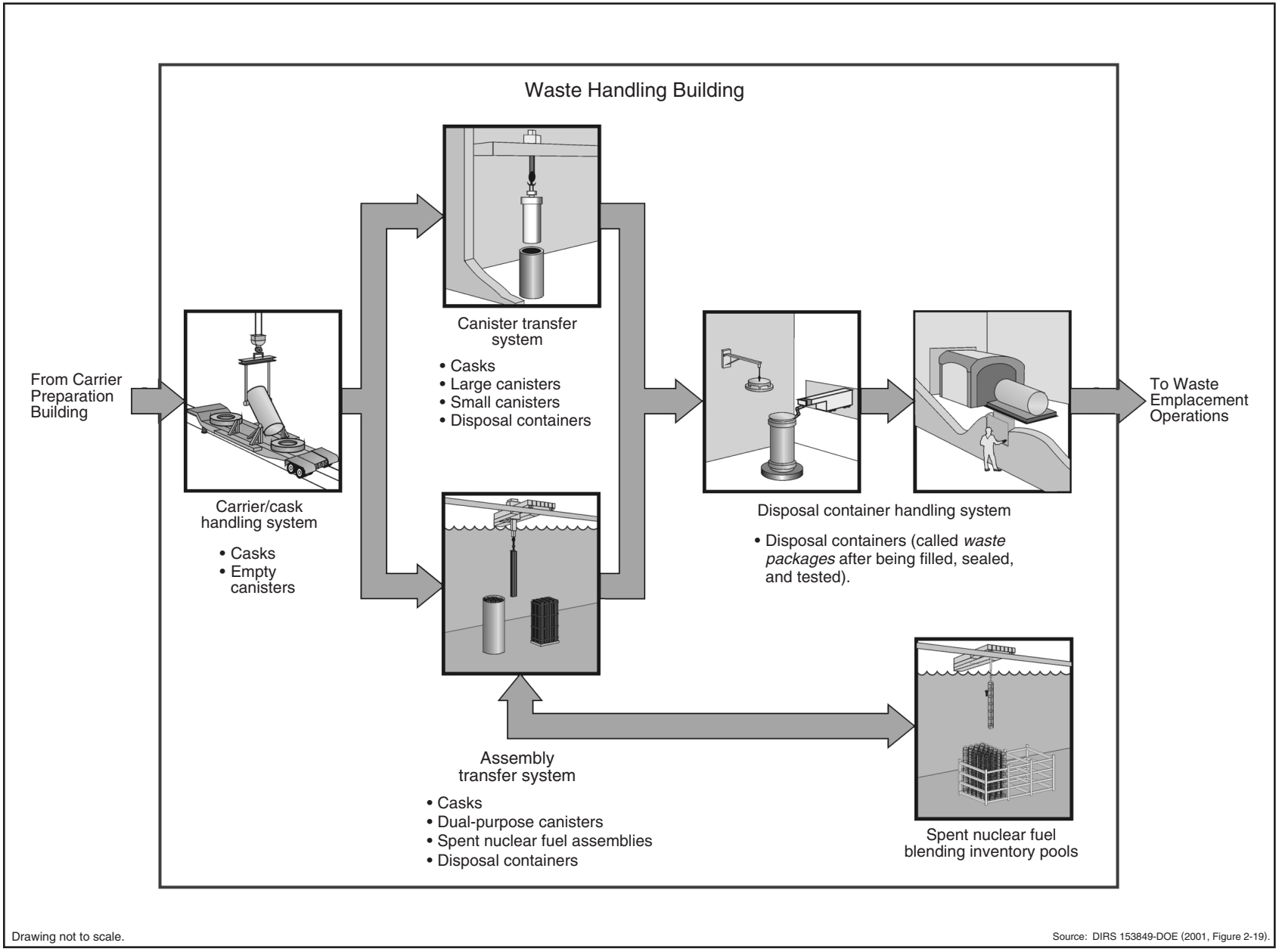

Figure 2-11. Key components of Waste Handling Building operations.

Section 2.1.2.1.1.2 for further information on the processes for blending, use of small waste packages, and aging to meet the flexible design linear thermal load criteria.) When a fuel assembly was selected from the fuel inventory pool for packaging, a transfer cart would move it underwater back through the fuel blending pool to an inclined transfer canal and onto a cart that connects to the assembly drying area.

After fuel assemblies arrived at the assembly drying area, a fuel-handling machine would transfer them into one of two drying vessels. After drying, the system would retrieve the assemblies and transfer them, one at a time, to a disposal container. The empty assembly baskets would be returned to the pool area for reuse. After installation of the sealing device and the inner lid, the system would then evacuate the disposal container internal cavity and fill it with nitrogen gas to exclude oxygen and prevent corrosion from the inside of the waste package. Finally, the transfer cart would transfer the container to the lid welding and inspection area.

The disposal container handling system would receive loaded disposal containers from both the canister transfer system and the assembly transfer system. Each disposal container would again be evacuated and filled with helium, after which the container's lids would be welded and the welds inspected. If the welds meet inspection criteria, the sealed disposal container would be reclassified as a waste package. A crane would transfer the waste package to the transporter loading area, where it would be decontaminated and placed on a pallet, then on a transporter for emplacement in the subsurface repository.

For more details on waste handling, see Section 2.2.4.2 of the Science and Engineering Report (DIRS 153849-DOE 2001).

2.1.2.1.1.2 Approach to Fuel Blending. Spent nuclear fuel and high-level radioactive waste arriving at the repository would be in solid form, but in a variety of types and sizes. Hence, the materials would arrive in a variety of transportation casks, all certified for use by the Nuclear Regulatory Commission. Commercial spent nuclear fuel would arrive as either individual fuel assemblies placed directly into transportation casks, or in dual-purpose canisters in transportation casks that would have to be opened to remove the fuel assemblies. DOE spent nuclear fuel and high-level radioactive waste would arrive in disposable canisters (that is, canisters that would not be opened, but would be transferred directly into a disposal container). Because of the variety of waste forms to be disposed of, about 10 different designs for disposal containers (called waste packages after being loaded, sealed, and certified) would be needed (DIRS 153849-DOE 2001, Section 2.2.1).

The radioactive decay process generates heat. The concentrations of particular isotopes would vary among the different waste forms, and among different fuel assembles in the same type of waste form, so different waste packages would generate different amounts of heat. Because the repository would have established temperature limits, DOE would establish a maximum heat output for all waste packages. For the repository, the maximum heat output would be 11.8 kilowatts per waste package (DIRS 153849-DOE 2001, Section 2.2.1).

The limit on heat output from individual waste packages would impose special considerations for operations and costs. The DOE strategy for controlling heat output would be to load waste packages that mixed low-heat-output spent nuclear fuel with high-heat-output spent nuclear fuel to balance total waste package heat output. This process, called *fuel blending* (DIRS 153849-DOE 2001, Section 2.2.1), would apply only to commercial spent nuclear fuel, which generates much more heat than DOE spent nuclear fuel or high-level radioactive waste (see Appendix A).

To manage heat output, DOE would hold some fuel assemblies in the fuel blending pool in the Waste Handling Building inventory until they generated less heat from radioactive decay or until additional low-heat-output fuel assemblies arrived for blending. The repository would be designed with a fuel blending inventory capacity of approximately 5,000 MTHM, or 12,000 spent nuclear fuel assemblies. By

carefully planning and implementing a fuel-blending procedure, DOE could limit and optimize the heat output of the waste packages without increasing their number (DIRS 153849-DOE 2001, Section 2.2.1).

Potential Additional Assembly Transfer Lines in Waste Handling Building. If DOE were to use the smaller waste packages to achieve lower-temperature operation, there would be an increase in the number of assembly transfer lines from two to four. The number of associated hot cells, welding stations, and waste package transporter loading lines would also increase to accommodate the additional canister and waste package handling capacity needed to maintain an emplacement rate of 3,000 MTHM per year. The overall handling process would be the same as that described above.

Potential Commercial Spent Nuclear Fuel Aging Facility. If DOE were to use aging of commercial spent nuclear fuel to achieve the lower-temperature repository operating mode, the aging area would be north and east of the North Portal Operations Area (see Figure 2-10). The spent nuclear fuel aging facility would include access roads, aisles, security fences, and concrete pads to implement the aging process. This area and access to it from the Waste Handling Building would be appropriately restricted for radiation control.

With the use of aging, the handling of commercial spent nuclear fuel would be different than the approach described above because the 5,000-MTHM (12,000 assemblies) blending inventory pools would be unnecessary. Instead, DOE would use a small staging pool for fewer than 80 assemblies for handling processes that required a pool. DOE would replace the assembly transfer system with two dry handling lines, and would add a dry staging hot cell. Commercial spent nuclear fuel would be handled as described above, except it would be loaded into a canister at the surface facility. The canister would be loaded into a dry *storage cask* for movement to and placement on a pad in the aging facility for the duration of the aging period (emplacement with aging is assumed to require 50 years). A motorized or towed transporter, designed to support the aging process, would be used to move the dry storage canister to the aging facility. When the spent nuclear fuel had completed the aging process, it would be transferred from the aging facility to the Waste Handling Building to be placed in a waste package for emplacement as described above.

The Science and Engineering Report (DIRS 153849-DOE 2001), Section 2.1.5, Assessing the Performance of a Lower-Temperature Operating Mode, and Section 2.2, Repository Surface Facilities, provide further detail on the proposed repository higher- and lower-temperature operations. Section 2.2.1 of the Science and Engineering Report provides further discussion on fuel blending strategies and Section 2.2.2.2 provides a more detailed description of the waste handling operations and blending. The essential features for EIS analysis have been presented here.

2.1.2.1.1.3 Generation of Wastes. DOE would decontaminate empty canisters, shipping casks, and related components as required in the Waste Handling Building. After decontamination, the empty canisters and shipping casks would be loaded on truck or rail carriers, sent to the Carrier Preparation Building for processing, and shipped off the site.

Waste generated at the repository from the decontamination of canisters and shipping casks and from other repository housekeeping activities would be collected, processed, packaged, and staged in the Waste Treatment Building before being shipped off the site for disposal at permitted facilities. Waste minimization and pollution prevention measures would reduce the amount of *site-generated waste* requiring such management. For example, decontamination water could be treated and recycled to the extent practicable. Site-generated wastes would include low-level radioactive waste, *hazardous waste*, and *industrial solid waste*. Operations would not be likely, but that could occur, could produce small amounts of mixed wastes (wastes containing both radioactive and hazardous materials). The repository design would include provisions for collecting and storing mixed waste for offsite disposal.

The ventilation systems for the Waste Handling Building and the Waste Treatment Building would provide confinement of radioactive contamination by using pressure differentials to ensure that the air would flow from areas free of contamination to areas potentially contaminated to areas that are normally contaminated. The monitored exhaust air from both buildings would pass through high-efficiency particulate air filters before being released through a single exhaust stack.

2.1.2.1.2 *South Portal Development Area*

The South Portal Development Area would cover about 0.15 square kilometer (37 acres) immediately adjacent to the South Portal of the subsurface facility. The structures and equipment in this area, which would support the development of subsurface facilities, would include steel warehousing, and basic facilities for personnel support, maintenance, warehousing, material staging, security, and transportation. From this area, overland conveyors would transport excavated rock from the repository to the excavated rock storage area (see Figure 2-10).

2.1.2.1.3 *Ventilation Shaft Operations Areas*

The higher-temperature repository operating mode would require three emplacement intake *shafts* and one development intake shaft to support simultaneous development and emplacement activities (see Figure 2-12). Three exhaust shafts would support the full emplacement of 70,000 MTHM. The lower-temperature repository operating mode could require three to seven emplacement intake shafts, one development intake shaft, and five to nine exhaust shafts, depending on the repository layout (DIRS 152003-McKenzie 2000, Option 1, p. 3, and Option 2, p. 3). See Section 2.1.2.2.2 for more discussion of the overall ventilation of the repository and Table 2-2 for a comparative listing.

The Ventilation Shaft Operations Area would have separately developed areas of approximately 0.012 square kilometer (3 acres) each for the emplacement intake, development intake, and exhaust shafts. The total area required for ventilation shafts would range from 0.0085 square kilometer (21 acres) for the higher-temperature operating mode and 0.021 square kilometer (51 acres) for the larger lower-temperature operating mode repository. Each exhaust shaft would contain two 2,000-horsepower fans, with a combined capacity of 800 to 850 cubic meters per second (28,000 to 30,000 cubic feet per second). The ventilation system would be monitored for radioactivity and the air would be filtered as needed.

2.1.2.1.4 *Support Facilities and Utilities*

2.1.2.1.4.1 Storage of Excavated Rock. Repository support facilities and utilities would be on the surface in the general vicinity of the North Portal Operations Area and the South Portal Development Area (see Figure 2-10). The storage area for excavated rock would be the largest support area. The excavated rock storage area for the higher-temperature repository operating mode would be 0.9 square kilometer (220 acres) (DIRS 150941-CRWMS M&O 2000, Figure 6-1). The amount of excavated rock would increase under the lower-temperature repository operating mode as a result of increased waste package spacing. This rock would be stored in the excavated rock storage area, which could be as large as 1.4 square kilometers (347 acres) (DIRS 152003-McKenzie 2000, Option 1, p. 24). Table 2-2 lists the range of the amount of excavated rock for the repository operating modes considered in this Final EIS.

2.1.2.1.4.2 Wastewater and Stormwater Facilities. The repository site would have two evaporation ponds for industrial wastewater, one near the North Portal and one near the South Portal. Sources of industrial wastewater that would go into these ponds include dust suppression water returned to the surface from tunnel boring operations, blowdown from cooling-tower operations at the North Portal, and water from concrete mixing and cleanup. The industrial wastes would be normal operational affluents that would not contain radiological waste and would be processed according to industrial standards and regulations. In both ponds, heavy plastic liners would prevent water migration into the soil.

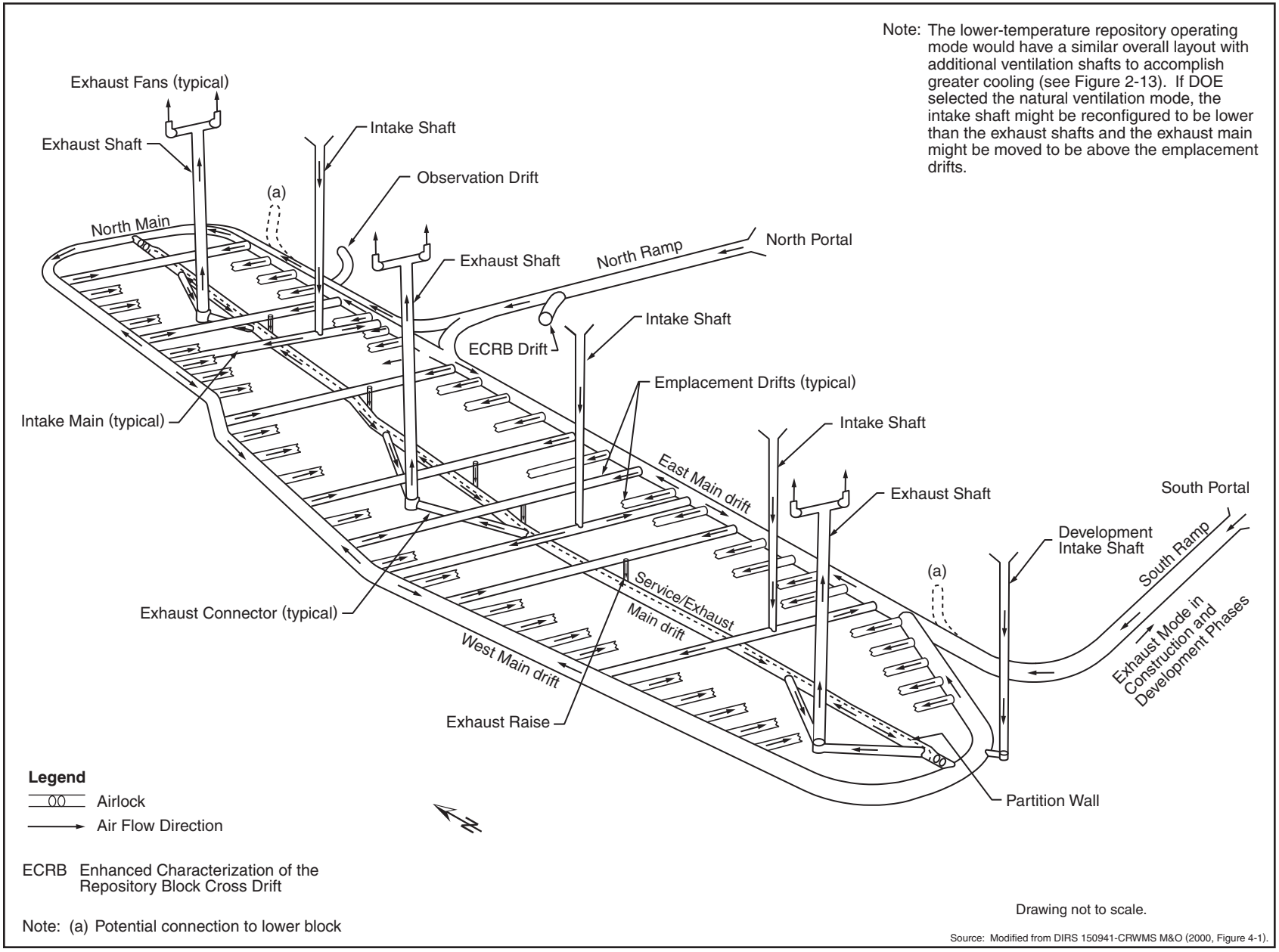

Figure 2-12. Higher-temperature repository operating mode preclosure ventilation air flow in primary block.

The North Portal pond would cover about 0.024 square kilometer (6 acres). The evaporation pond at the South Portal would be about 0.0024 square kilometer (0.6 acre). The North Portal Operations Area would also include an approximately 0.13-square-kilometer (32-acre) stormwater retention pond to control stormwater runoff from the area.

2.1.2.1.4.3 Solid Waste Disposal and Hazardous Waste Management. DOE would package hazardous waste and ship it off the site for treatment and disposal. The Department would develop an appropriately sized landfill [approximately 0.036 square kilometer (9 acres)] at the repository site for nonhazardous and nonradiological construction and *sanitary solid waste* and for similar waste generated during the operation and monitoring and closure phases. The South Portal Development Area would have a septic tank and leach field for the disposal of sanitary sewage. The North Portal Operations Area has an existing septic system that would be adequate for use during repository operations.

2.1.2.1.4.4 Electric Power. The repository would use the Nevada Test Site electric power distribution system, which would require upgrades to handle the demand for the various operational modes considered. At present, electric power at the Yucca Mountain site comes from that system. For the repository, electric power would be distributed throughout the surface and subsurface areas and to remote areas such as the Ventilation Shaft Operations Areas, construction areas, *environmental monitoring* stations, transportation lighting and safety systems, and water wells. To accommodate the expected electric power demand for the repository (estimated to be between 40 and 54 megawatts at peak demand), DOE would upgrade existing electrical transmission and distribution systems. Backup equipment and uninterruptible electric power would ensure personnel safety and operations requiring electric power continuity. Diesel generators and associated switchgear would provide the backup power capability.

In addition, DOE would use electricity from renewable energy sources at the repository (DIRS 153882-Griffith 2001, all). The repository design would include a solar power generating facility, which could produce as much as 3 megawatts of power, and would be a dual-purpose facility, serving as a demonstration of *photovoltaic* power generation and augmenting the overall repository electric power supply (as much as 7 percent). This facility would require about 0.16 square kilometer (40 acres), plus land for an access road and transmission line (DIRS 153882-Griffith 2001, p. 1). The system would be constructed in phases of 500 kilowatts starting in 2005 (DIRS 153882-Griffith 2001, pp. 1 and 6). It would be connected to the repository electric power distribution system. A typical solar power generating facility consists of solar cells (photovoltaic arrays) and support facilities. The solar power generating facility could be in the vicinity of the North Portal Operations Area.

2.1.2.1.4.5 Water Supply. DOE would continue to use existing wells about 5.6 kilometers (3.5 miles) southeast of the North Portal Operations Area to supply water for repository activities for both operating modes. These wells have supplied water for site characterization activities. DOE would seek the necessary authorization to continue withdrawing water from the wells for repository activities. Alternative water sources could include supplying water via truck and pipeline.

Water would be pumped to a booster pump station, then to storage tanks at the North Portal Operations Area and the South Portal Development Area. These elevated tanks would provide gravity-fed water to the distribution systems. At both portal areas, water would go to potable and nonpotable water systems; the nonpotable systems would provide water to fire protection systems, to the supplemental system that would supply deionized water to the fuel storage pools, and to the cooling tower for the heating, ventilation, and air conditioning system.

2.1.2.1.4.6 Fossil Fuel. Fuel supply systems would include fuel oil for a central heating (hot water) plant, which would consist of a main tank and a day tank. In addition, there would be fuel supply systems for fire water system tank heaters, for diesel-powered standby generators and air compressors, and for

backup fire pumps. There would also be diesel fuel and gasoline to fuel vehicles during the construction, operation and monitoring, and closure of the repository. In addition, fossil-fuel powered vehicles would maintain the excavated rock storage area.

2.1.2.2 Repository Subsurface Facilities and Operations

DOE would construct the subsurface facilities of the repository and emplace the waste packages above the water table in a mass of volcanic rock (referred to as the *repository block*) known as the Topopah Spring Formation, which consists of *welded tuff* (see Chapter 3, Section 3.1.3.1). The specific area in this formation where DOE would build the repository emplacement drifts would satisfy several criteria: (1) to be in select portions of the Topopah Spring Formation that have desirable properties, (2) to avoid major faults for reasons related to both hydrology and *seismic* hazards (see Section 3.1.3.2), (3) to be at least 200 meters (660 feet) below the surface (DIRS 154554-BSC 2001, Section 4.2.1.2.9, p. 29), and (4) to be at least 160 meters (530 feet) above the present-day water table (DIRS 154554-BSC 2001, Section 4.2.1.2.4 p. 28).

The flexible design would use part or all of the layout shown in Figure 2-13. The smallest area that DOE would use is the shaded area that corresponds to the higher-temperature repository operating mode. DOE would use the full area shown for some of the possible lower-temperature repository operating modes (DIRS 153849-DOE 2001, Section 2.1.5.1).

The higher-temperature operating mode would utilize the upper (primary) block of the repository, using 4.7 square kilometers (1,150 acres) (DIRS 153849-DOE 2001, Section 2.3.1.1) (see Figure 2-13) and would require seven emplacement and development ventilation shafts. The lower-temperature repository operating mode could require as many as 17 ventilation shafts (see Table 2-2).

2.1.2.2.1 *Subsurface Facility Design and Construction*

The subsurface design would incorporate most of the drifts developed during the site characterization activities. Other areas would be excavated during the repository construction phase. Excavated openings would include gently sloping access ramps to enable rail-based movement of construction and waste package handling vehicles between the surface and subsurface, subsurface main drifts to enable the movement of construction and waste package handling vehicles, emplacement drifts for the placement of waste packages, exhaust mains to transfer air in the subsurface area, and ventilation shafts to transfer air between the surface and the subsurface. There would also be performance confirmation (observation) drifts for the placement of instrumentation to monitor emplaced waste packages (see Figure 2-13).

Access ramps connecting the surface and subsurface would be concrete-lined, 7.6-meter (25-foot)-diameter tunnels excavated by electric-powered tunnel boring machines (see Figure 2-14). Rail lines and an overhead trolley system would enable the movement of electric-powered construction and waste package handling vehicles. DOE developed the North and South Ramps, which would become part of the proposed repository, during site characterization. The North Ramp begins at the North Portal Operations Area on the surface (see Section 2.1.2.1.1) and extends through the subsurface to the edge of the repository area. It would support waste package emplacement operations. The South Ramp originates at the South Portal Development Area on the surface (see Section 2.1.2.1.2) and extends through the subsurface to the edge of the repository area. It would support subsurface construction and development activities.

The main drifts for the higher-temperature repository operating mode would include the East Main, the West Main, and the North Main. These drifts would be extended for the lower-temperature operating modes and additional main drifts would be excavated to provide access to other emplacement areas.

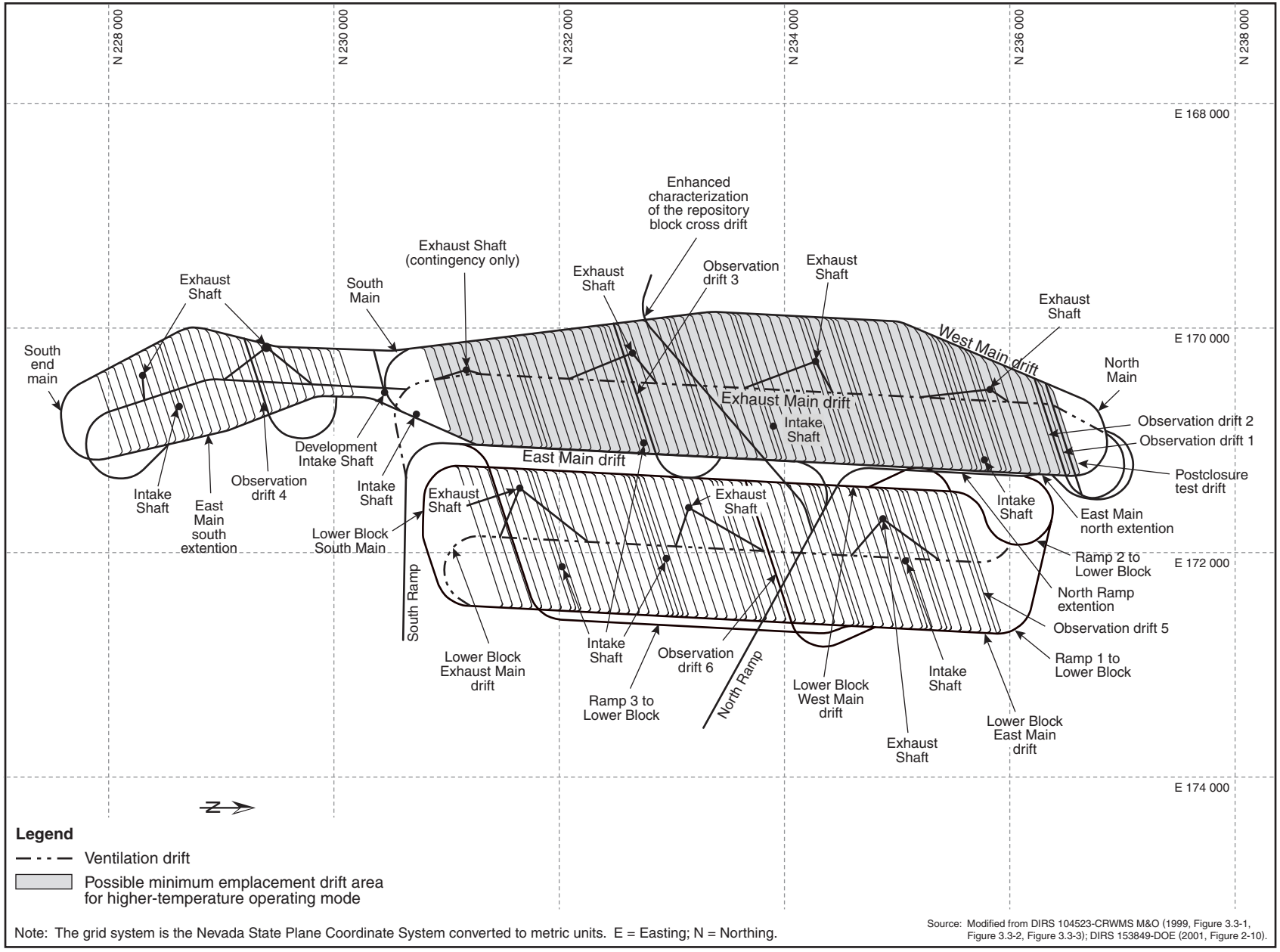

Note: The grid system is the Nevada State Plane Coordinate System converted to metric units. E = Easting; N = Northing.

Source: Modified from DIRS 104523-CRWMS M&O (1999, Figure 3.3-1, Figure 3.3-2, Figure 3.3-3); DIRS 153849-DOE (2001, Figure 2-10).

Figure 2-13. Flexible design operating mode repository layout showing possible maximum emplacement drift area.

Figure 2-14. Tunnel boring machine.

Main drifts would be concrete-lined, 7.6-meter (25-foot)-diameter tunnels excavated by tunnel boring machines. Rail lines and an overhead trolley system in the main drifts would enable the movement of electric-powered construction and waste package handling vehicles. The East Main drift was excavated as part of site characterization activities but was not lined with concrete. During the operation and monitoring phase, the main drifts would support both subsurface development and waste package emplacement, which would occur simultaneously. Ventilation barriers creating airlocks would separate the emplacement and development sides of the repository, and the ventilation system would maintain the emplacement side at a lower pressure than the development side. This would ensure that any air transfer would be from the development side to the emplacement side.

The flexible design is based on an emplacement drift spacing of approximately 81 meters (266 feet) (DIRS 153849-DOE 2001, Section 2.3.1.1). Emplacement drifts would be 5.5-meter (18-foot)-diameter tunnels connecting the main drifts; they could have steel ribbing. These drifts would be excavated by an electric-powered tunnel boring machine. Remotely operated steel isolation doors at the emplacement drift entrances would prevent unauthorized human access and reduce radiation exposure to personnel.

As noted above, tunnel boring machines would excavate the emplacement drifts and most main drifts. DOE would use other mechanical excavators in areas where tunnel boring machines were impractical (for example, excavating turnouts and small alcoves) or industry-standard drill and blast techniques in limited applications where mechanical excavators were impractical. Ventilation shafts [8.0 meters (26 feet) in diameter] would be excavated from the surface to the repository using mechanical or drill-and-blast techniques. (DIRS 153849-DOE 2001, p. 2-95). Specialized equipment would move excavated rock in the subsurface to the conveyor system that would move the rock to the excavated rock storage area on the surface. During drift excavation, water supplied to the subsurface in pipelines would be used for dust control at the excavation location and along the conveyor carrying excavated rock. Some of the water would be removed from the subsurface with the excavated rock, some would evaporate and be removed in the ventilation air, and the remainder would be collected in sumps near the point of use and pumped to the evaporation pond at the South Portal. DOE could recycle the water discharged to the evaporation pond for surface dust suppression activities. Controls would be established, as necessary, to ensure that water application for subsurface (and surface) dust control would not affect repository performance.

2.1.2.2.2 *Ventilation*

The repository design uses ventilation shafts to provide airflow to the subsurface during construction, emplacement, and performance monitoring. It also provides positive pressure ventilation flow for the construction and development of the repository and negative pressure ventilation flow in the emplacement drifts. Further, the design includes monitoring for radioactive contamination and preventive measures to achieve mitigation against the spread of such contamination. The development side would be isolated from the emplacement side. Table 2-2 lists the number of ventilation shafts and flow rates.

The flexible design uses an emplacement drift forced-air ventilation rate of 15 cubic meters (530 cubic feet) per second in each emplacement drift to control temperatures in the rock between the emplacement drifts, at the drift wall, and at the waste package surface to meet thermal goals. Figure 2-12 shows the general airflow pattern for ventilation of the emplacement drifts under the higher-temperature repository operating mode, using a representative section of a fully developed repository. In the basic ventilation design, fresh air would enter through the surface ends of intake shafts and ramps and would flow to the East and West Mains. From the mains, air would enter the emplacement, performance confirmation, or reserve drifts and flow to exhaust raises near the center of each drift. The exhaust raises would direct the airflow down to the exhaust main, where it would continue to an exhaust shaft and then to the surface.

Fans at the surface ends of the exhaust shafts would provide the moving force for the subsurface repository airflow. The fans would have enough power to exhaust the maximum amount of air required during the emplacement, monitoring, and closure periods. The volume of air moved by the fans would be adjustable to meet cooling requirements as they varied over time. The fans would draw air through the exhaust mains at a rate that ensured that air would always flow into the emplacement drifts from the main drifts, never allowing air to recirculate back to the main drifts.

Ventilation under the higher-temperature repository operating mode would remove at least 70 percent of the heat generated by the waste inventory during the preclosure period (DIRS 153849-DOE 2001, Section 2.1.2.2). The peak ventilation air temperature of 58°C (about 136°F) for a 1.4-kilowatt-per-meter linear thermal load would occur about 10 years into the preclosure period and would decrease thereafter (DIRS 150941-CRWMS M&O 2000, pp. 4-24 to 4-25). This temperature is lower than the exhaust air temperature of many industrial processes, such as powerplants and manufacturing facilities. The peak ventilation air temperature under the lower-temperature repository operating mode would be lower than that described above.

Ventilation requirements for emplacement drifts would vary according to the activities conducted in those drifts. Prior to emplacement, ventilation would provide fresh air and control dust levels to ensure an acceptable environment for construction personnel. During emplacement, ventilation would maintain drift temperatures within an acceptable range for equipment operation.

While DOE was conducting concurrent development and emplacement operations, it would maintain two separate ventilation systems, one for each operational area (development and emplacement). This separation would be accomplished by placing airlocks in the main drifts to ensure physical separation of the air space between the two areas. On the development side, the ventilation system would work under positive pressure, with air forced in through the development intake shaft or the South Ramp through a duct and exhausted through the South Ramp. On the emplacement side, the required ventilation facilities for the commissioned emplacement drifts would be available and operational in their final configuration; the ventilation system would work under negative pressure by drawing air out through the exhaust main (through the exhaust or “hot” side of the exhaust main), and from there through the exhaust shafts.

2.1.2.2.3 *Waste Package Emplacement Operations*

DOE would transport both the waste package and metal emplacement pallet as an integral unit from the Waste Handling Building to the prepared *ground support* in the emplacement drift. The transport of each waste package to the subsurface would start after the loading of a waste package and its emplacement pallet on a bedplate (railcar) transporter in the Waste Handling Building and then into the shielded section of the transporter. At its closed end the transporter would be coupled to a manned primary electric-powered locomotive (trolley). A manned secondary electric-powered locomotive would then be coupled to the transporter at the door end outside the Waste Handling Building (DIRS 153849-DOE 2001, Section 2.3.4.4.1). All waste packages would be transported by trolley underground through the North Ramp and into the emplacement area main drift. On arrival at the emplacement drift, the secondary locomotive would be uncoupled from the transporter, which would then be pushed into the emplacement drift turnout by the primary locomotive and stopped short of the isolation doors and loading dock. The operators would leave, and the locomotive operation would proceed by remote control. The isolation doors would be opened remotely, as would the transporter doors. Under remote control, the primary locomotive would push the waste package transporter into the off-loading dock. The waste package and pallet, seated on the bedplate, would be rolled out of the transporter, under remote control, to stop on the transfer section of the railcar. The remote-controlled gantry would straddle the waste package and pallet, lift the waste package and pallet from the bedplate, and carry them to the designated location in the emplacement drift. The bedplate would be rolled back into the waste package transporter, the transporter doors would be closed, and the transporter would be moved back to the access main drift using the

primary locomotive under remote control. The isolation doors in the turnout would be closed, allowing the locomotive operators to recouple the secondary locomotive to the railcar. The empty transporter would be returned to the Waste Handling Building to pick up the next waste package (DIRS 153849-DOE 2001, Section 2.3.4.4.1).

DOE has developed plans for waste package retrieval for normal and off-normal conditions. Waste package retrieval under normal conditions would use the same subsurface equipment and facilities as emplacement, but in reverse order. This would provide a built-in capability for retrieval that could be readily implemented. Individual waste package removal for inspection, testing, and maintenance reasons is not considered retrieval; however, waste package removal for these purposes, if needed, would involve the same equipment and operational steps. Alternative waste package retrieval equipment and processes have been identified for off-normal conditions when normal retrieval procedures could be difficult or impossible to execute. Additionally, support equipment (equipment to remove obstacles, prepare surfaces, or install temporary ground supports) that could be used in retrieval operations under off-normal conditions has been identified. The equipment and processes would support various scenarios such as repair of the railing system, repositioning the emplacement pallet and waste package, or cleaning or removal of debris. All retrieval scenarios include radiation and temperature controls and other administrative controls, as needed, to conduct a safe retrieval operation (see DIRS 153849-DOE 2001, Section 2.3.4.6).

2.1.2.2.4 *Engineered Barrier Design*

Engineered barriers would include those components in the emplacement drifts that would contribute to waste containment and isolation. The design includes the following components as engineered barriers: (1) waste package, (2) emplacement drift *invert*, (3) *drip shield*, and (4) to a lesser extent, ground support (DIRS 153849-DOE 2001, Section 2.4). The following sections describe the details of these components.

2.1.2.2.4.1 Waste Package and Drip Shields. The function of the waste package would change over time. During the operation and monitoring phase, the waste packages would function as the vessels for safely handling, emplacing and, if necessary, retrieving their contents. After closure, the waste packages would be the primary engineered barrier to inhibit the release of radioactive material to the environment. The waste package design consists of two closed concentric cylinders in which DOE would place the waste forms.

The waste package would have a corrosion-resistant *Alloy-22* outer shell and a stainless-steel (Type 316NG) inner shell to provide structural support (DIRS 153849-DOE 2001, Section 3). Alloy-22 consists mostly of nickel, chromium (up to 22.5 percent), and molybdenum (up to 14.5 percent). Type 316NG stainless steel consists mostly of iron, chromium (up to 18 percent), nickel (up to 14 percent), and molybdenum (up to 3 percent) (DIRS 153849-DOE 2001, Section 3.4.1.1). In addition, the waste package would have a top lid design that consisted of three lids. The innermost lid would be stainless steel welded to the stainless-steel shell. The middle and outer lids would be Alloy-22, welded to the Alloy-22 outer shell (DIRS 153849-DOE 2001, Section 3) (see Figure 2-15). The highly corrosion-resistant Alloy-22 outer shell of the waste package would protect the underlying structural material from corrosive degradation, while the strong internal structural material would support the thinner corrosion-resistant material.

A drip shield with a nominal thickness of 1.5 centimeters (0.6 inch) of highly corrosion-resistant titanium would be placed over the waste package just before repository closure. The titanium drip shield and the Alloy-22 outer cylinder would provide two diverse engineered corrosion barriers to protect the waste from contact with water. The use of two distinctly different corrosion-resistant materials would reduce the *probability* that a single mechanism could cause the failure of both materials. Figure 2-16 shows a side view of a drip shield and an end view of the waste package and drip shield.

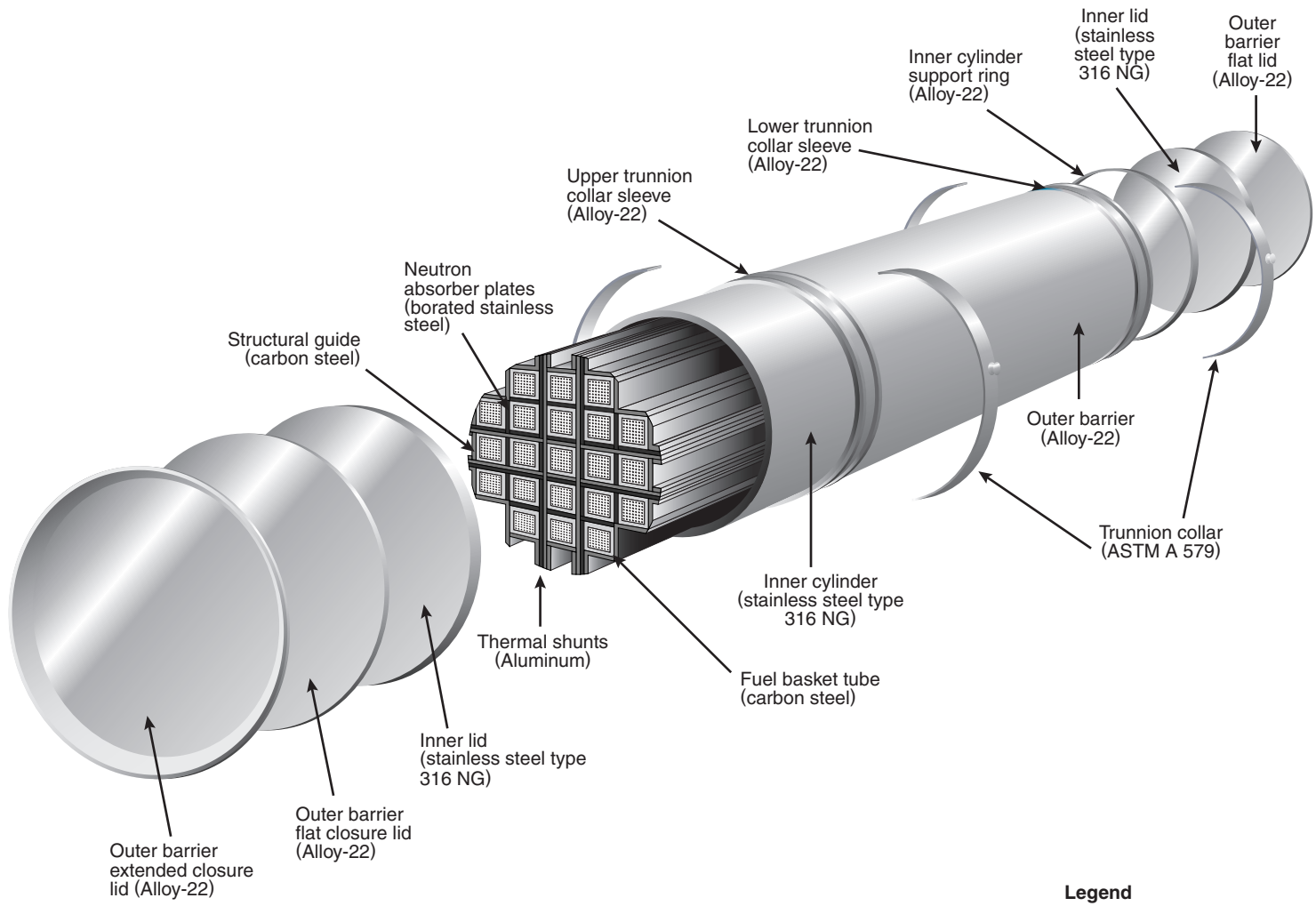

Legend

ASTM	American Society for Testing and Materials
NG	Nuclear grade stainless steel
SS	Stainless steel

Drawing not to scale.

Source: Modified from DIRS 153849-DOE (2001, Figure 3-2).

Notes: Glossary contains definitions of terms.

Figure 2-15. Waste package for commercial spent nuclear fuel (pressurized-water reactor waste package).

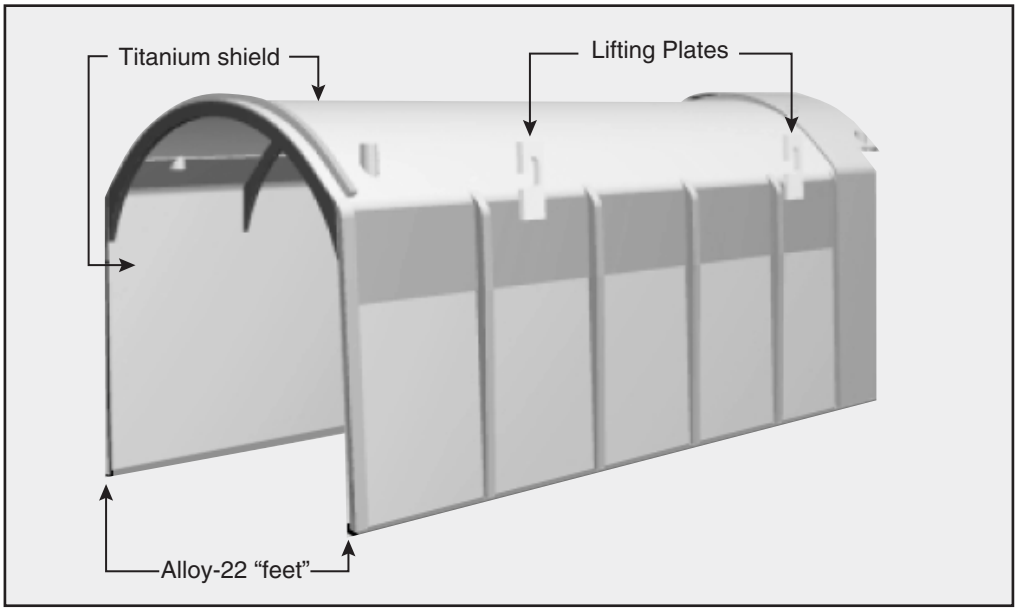

Drip shield

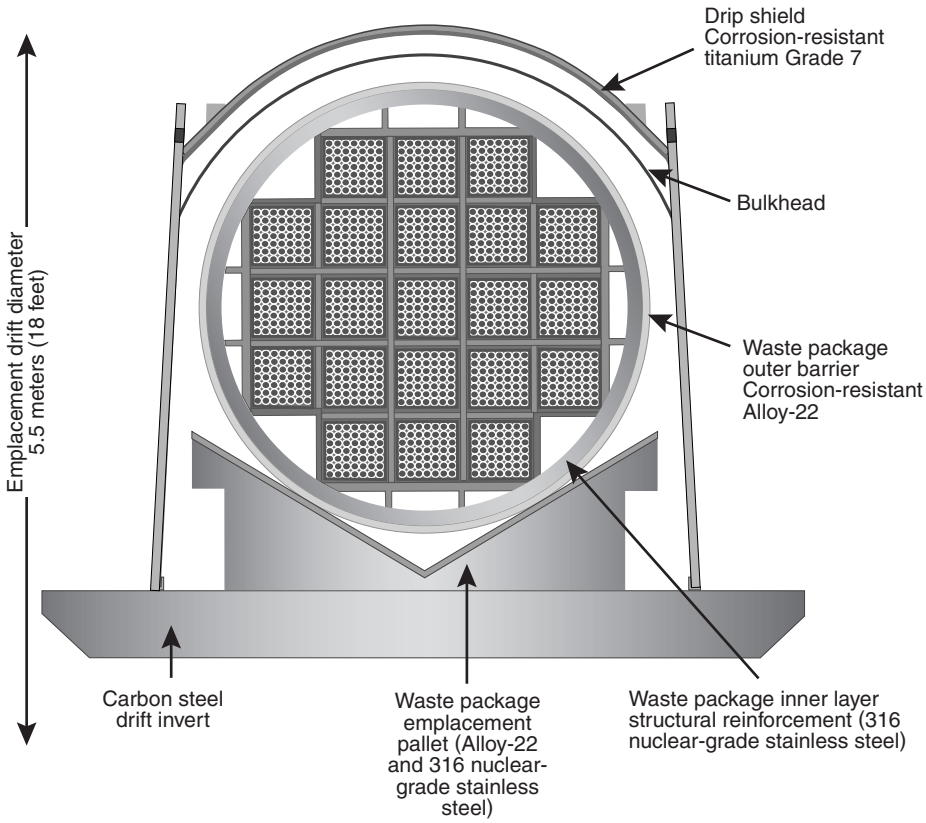

Drawing not to scale.

Source: Modified from DIRS 153849-DOE (2001, Figures 2-73 and 3-1).

Figure 2-16. Drip shield and waste package containing commercial spent nuclear fuel with drip shields in place.

Commercial spent nuclear fuel, DOE spent nuclear fuel, and immobilized plutonium contain *fissile material*, which is material capable, in principle, of sustaining a fission *chain reaction*. For a self-sustaining chain reaction to take place, a critical mass of fissile material—uranium-233 or -235 or one of several plutonium isotopes—must be arranged in a critical configuration. Waste packages would be loaded with fissile material and *neutron absorbers*, if needed, so *criticality* could not occur even in the unlikely event that the waste package somehow became full of water.

After the repository ventilation was stopped and heat produced by the waste packages had decreased (both of which would happen after closure), moisture could enter the emplacement drifts in liquid or vapor form. The function of the drip shields would be to divert water that dripped from the drift walls and water vapor that condensed on the surface of the drip shields away from waste packages, prolonging their longevity and structural integrity. Water dripping on the waste packages would increase the likelihood of corrosion. For the EIS analyses, the drip shields were considered to be a single continuous barrier for the entire length of the emplacement drift if the separation between the waste packages was less than 1.6 meters (5.3 feet). If the separation was greater than 1.6 meters, the EIS analyses used stand-alone drip shields. They would be strong enough to protect the waste packages from damage by rockfalls resulting from degradation of the drift walls, withstanding damage from rocks weighing several tons (DIRS 153849-DOE 2001, Section 2.4.4). To maintain waste package retrievability, the drip shields, via remote control, would be placed over the waste packages just before repository closure.

2.1.2.2.4.2 Ground Support Structures. In underground openings, ground support structures provide tunnel stability and help prevent rockfall. For the proposed repository, the ground support system would address in-place loads, construction loads, potential loads from repository operations, and loads from potential seismic occurrences (DIRS 153849-DOE 2001, Section 2.3.4.1.2). The system would consist of steel sets with welded-wire fabric and fully grouted rockbolts.

The main drifts, turnouts, exhaust main, and ventilation shafts (nonemplacement areas) would have separate initial and final ground support systems. Initial ground support methods would vary depending on ground conditions, and would include a combination of steel sets, welded-wire fabric, rockbolts, and shotcrete (concrete sprayed onto the surface at high pressure). The final ground support system for the nonemplacement drift areas would be cast-in-place concrete liners.

The observation drifts, which would support the performance confirmation program, would have a ground support system similar to that for the emplacement drifts if they were excavated with a tunnel boring machine. Otherwise, they would have a combination of support systems, including steel sets, welded-wire fabric, rockbolts, and shotcrete, depending on ground conditions (DIRS 153849-DOE 2001, Section 2.3.4.1.2.2).

2.1.2.2.4.3 Emplacement Pallets. The repository design uses emplacement pallets to support the waste packages. A waste package would be placed horizontally on its support (an emplacement pallet) in the Waste Handling Building and transported to the drifts as a unit. Figure 2-17 shows a conceptual design of spent nuclear fuel and high-level radioactive waste package types in an emplacement drift on emplacement pallets, drip shields, and steel sets for ground support. The emplacement pallet would support the waste package in the drift. While loaded with a waste package, the pallet would be lifted by lifting points at the support, directly under the upper stainless-steel tubes, as shown in Figure 2-18. The pallet design would meet the design requirements for structural strength during lifting under the weight of the heaviest waste package (DIRS 153849-DOE 2001, Section 2.3.4.4.2).

Figure 2-19 shows an emplacement pallet, and Figure 2-18 shows a waste package on an emplacement pallet. There would be two sizes of pallet: one that would hold most waste packages and a second, shorter version for the DOE codisposal waste package (DIRS 153849-DOE 2001, Section 2.3.4.4.2). The emplacement pallets would be made of Alloy-22 plates welded together to form the waste package

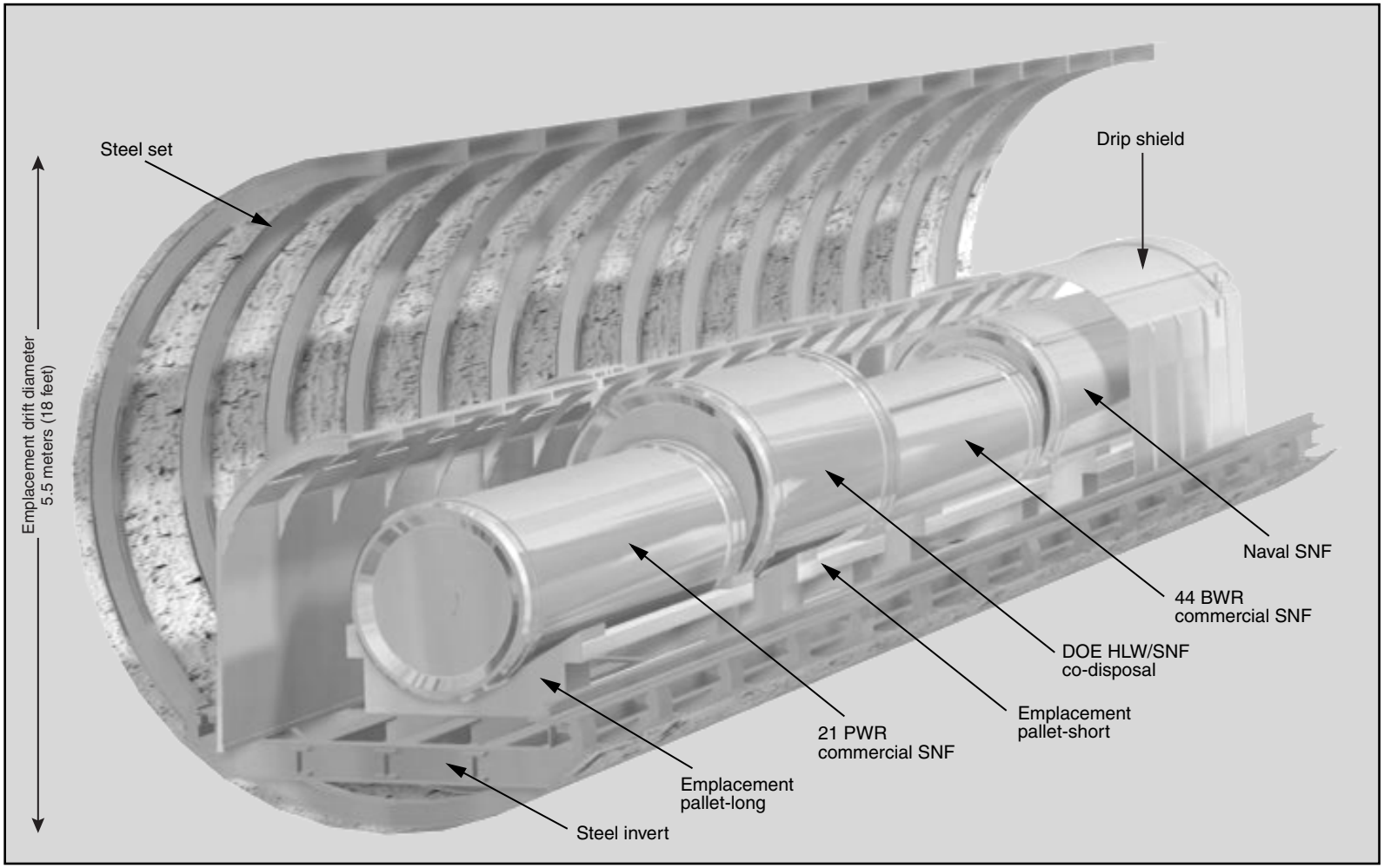

Drawing not to scale.

Legend

BWR Boiling-water reactor
DOE U.S. Department of Energy
HLW High-level radioactive waste
PWR Pressurized-water reactor
SNF Spent nuclear fuel

Source: Modified from DIRS 153849-DOE (2001, Figure 2-77).

Figure 2-17. Typical section of emplacement drift with waste packages and drip shields in place.

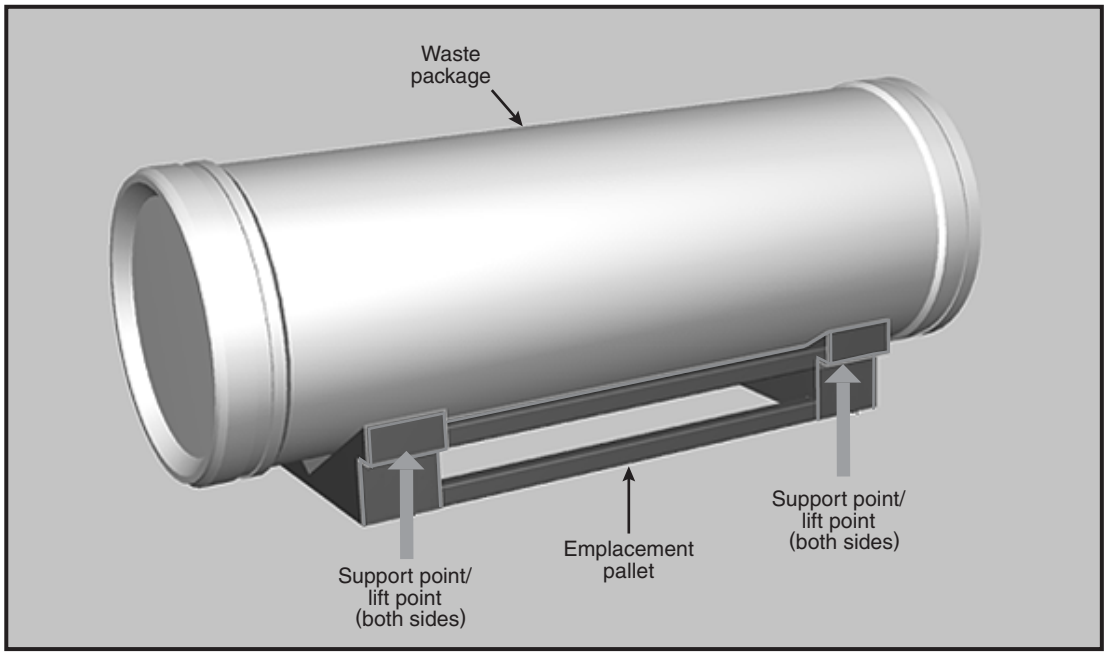

Drawing not to scale.

Source: DIRS 153849-DOE (2001, Figure 2-52).

Figure 2-18. Waste package on an emplacement pallet.

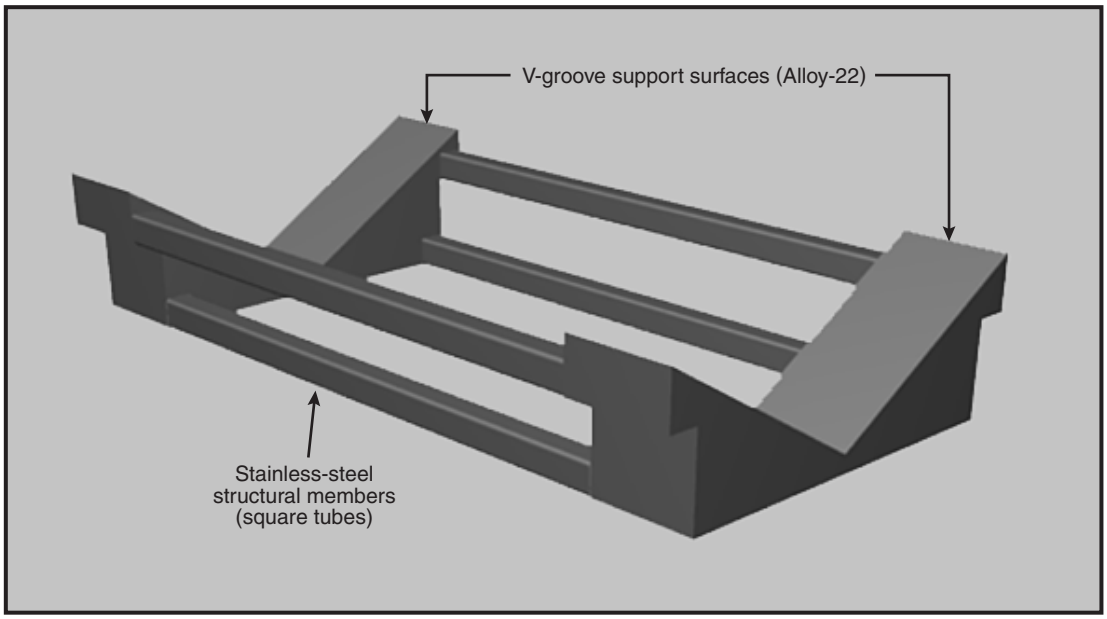

Drawing not to scale.

Source: DIRS 153849-DOE (2001, Figure 2-51).

Figure 2-19. Emplacement pallet.

supports. Two supports would be connected by square stainless-steel tubing to form the completed emplacement pallet. The supports would have a V-groove top surface to accept all waste package diameters. Emplacement pallet surfaces that contacted the waste package would be Alloy-22, the same material used for the outer package shell.

The ends of the waste package would extend past the ends of the emplacement pallet, which would allow placement of the waste packages end-to-end, within 10 centimeters (4 inches) of each other, without interference from the pallets (DIRS 153849-DOE 2001, Section 2.3.4.4.2).

2.1.2.3 Performance Confirmation Program

Performance confirmation refers to the program of tests, experiments, and analyses that DOE would conduct to evaluate the adequacy of the information used to demonstrate compliance that the repository would meet performance objectives. The performance confirmation program, which would continue through the licensing and construction phases and until the closure phase, would include elements of site testing, repository testing, repository subsurface support facilities construction, and waste package testing. Some of these activities would be a continuation of activities that began during site characterization.

To support performance confirmation activities, DOE would provide some specialized surface and subsurface facilities. DOE would build observation drifts below and above the *repository horizon* (DIRS 153849-DOE 2001, Section 2.5.2.2). The data-collection focus of the performance confirmation program would be to collect additional information to confirm the data used in the License Application. If the Nuclear Regulatory Commission granted a license, the activities would focus on monitoring and data collection for performance parameters important to terms and conditions of the license.

Performance confirmation drifts would be built about 15 meters (50 feet) above and below the emplacement drifts. DOE would drill boreholes from the performance confirmation drifts that would approach the rock mass near the emplacement drifts; instruments in these boreholes would gather data on the thermal, mechanical, hydrological, and chemical characteristics of the rock after waste emplacement. DOE would acquire performance confirmation data by sampling and mapping, from instruments in performance confirmation drifts or along the perimeter mains, ventilation exhaust monitoring, remote inspection systems in emplacement drifts, and monitoring of water quality in wells.

DOE would use the performance confirmation program data to evaluate system performance and to confirm predicted system response. If the data determined that actual conditions differed from those predicted, the Nuclear Regulatory Commission would be notified and remedial actions would be undertaken to address any such condition (DIRS 153849-DOE 2001, Sections 2.5 and 4.6).

2.1.2.4 Repository Closure

Before closure, an application to amend the Nuclear Regulatory Commission license would have to provide an update of the assessment of repository performance for the period after closure, as well as a description of the program for postclosure monitoring to regulate or prevent activities that could impair the long-term isolation of waste. The postclosure monitoring program, as required by Section 801(c) of the Energy Policy Act of 1992 and as required by the Nuclear Regulatory Commission (10 CFR Part 63), would include the monitoring activities that would be conducted around the repository after the facility had been closed and sealed. Regulations at 10 CFR 63.51(a)(1) and (2) would require the submittal of a license amendment for closure of the repository (see Section 2.3.4.8). The details of this program would be delineated during processing of the license amendment for closure. Deferring the delineation of this program to the closure period would allow identification of appropriate technology, including technology that might not be currently available (DIRS 153849-DOE 2001, Sections 2.3.4.8 and 4.6.1).

For the higher-temperature repository operating mode, this EIS assumes closure would begin 100 years after the start of emplacement (76 years after the completion of emplacement). In contrast, repository closure for the lower-temperature repository operating mode could begin 125 to 300 years after the completion of emplacement. Closure would take 10 years for the higher-temperature mode (DIRS 150941-CRWMS M&O 2000, p. 6-22) and between 11 and 17 years for the lower-temperature mode, depending on the waste package spacing.

Closure of the subsurface repository facilities would include the emplacement of the drip shields; removal and salvage of equipment and materials; filling of the main drifts, access ramps, and ventilation shafts; and sealing of openings, including ventilation shafts, access ramps, and boreholes. Filling would require surface operations to obtain fill material from the excavated rock storage area or another source, and processing (screening, crushing, and possibly washing) the material to obtain the required characteristics. Fill material would be transported on the surface in trucks and underground in open gondola railcars. A fill placement system would place the material in the underground main drifts and ramps. DOE would place the seals for shafts, ramps, and boreholes strategically to reduce *radionuclide* migration over extended periods, so these openings could not become pathways that could compromise the repository's postclosure performance (DIRS 153849-DOE 2001, Section 2.3.4.8).

Decommissioning surface facilities would include decontamination activities, if required, and facility dismantling and removal. Equipment and materials would be salvaged, recycled, or reused, if possible. Site reclamation would include restoring the site to as near its preconstruction condition as practicable, including the recontouring of disturbed surface areas, surface *backfill*, soil buildup and reconditioning, site revegetation, site water course configuration, and erosion control, as appropriate.

2.1.3 TRANSPORTATION ACTIVITIES

Under the Proposed Action, DOE would transport spent nuclear fuel and high-level radioactive waste from commercial and DOE sites to the repository. The Naval Nuclear Propulsion Program would transport *naval spent nuclear fuel* from the Idaho National Engineering and Environmental Laboratory to the repository. Naval spent nuclear fuel is one of the DOE fuels considered in this EIS. Transportation activities would include the loading of these materials for shipment at generator sites (Section 2.1.3.1), transportation of the materials to the Yucca Mountain site using truck, rail, heavy-haul truck, or barge [see Sections 2.1.3.2 (National) and 2.1.3.3 (Nevada)], and *shipping cask* manufacturing, maintenance, and disposal (Section 2.1.3.4). Chapter 6 and Appendix J provide further discussion of transportation processes considered.

2.1.3.1 Loading Activities at Commercial and DOE Sites

This EIS evaluates the loading of spent nuclear fuel and high-level radioactive waste at commercial and DOE sites for transportation to the proposed repository at Yucca Mountain. Activities would include preparing the spent nuclear fuel or high-level radioactive waste for delivery, loading it in a shipping cask, and placing the cask on a vehicle (see Figures 2-20 and 2-21) for shipment to the repository. This EIS assumes that at the time of shipment the spent nuclear fuel and high-level radioactive waste would be in a form that met approved acceptance and disposal criteria for the repository.

2.1.3.2 National Transportation

National transportation includes the transport of spent nuclear fuel and high-level radioactive waste from the commercial and DOE sites to the Yucca Mountain site using existing highways (see Figure 2-22a) and railroads (see Figure 2-23a). Figures 2-22b and 23b show the representation highway and rail routes, respectively, used in the EIS analysis to estimate transportation-related impacts (see Section 6.2 for further discussion). Heavy-haul trucks could be used to transport spent nuclear fuel from commercial

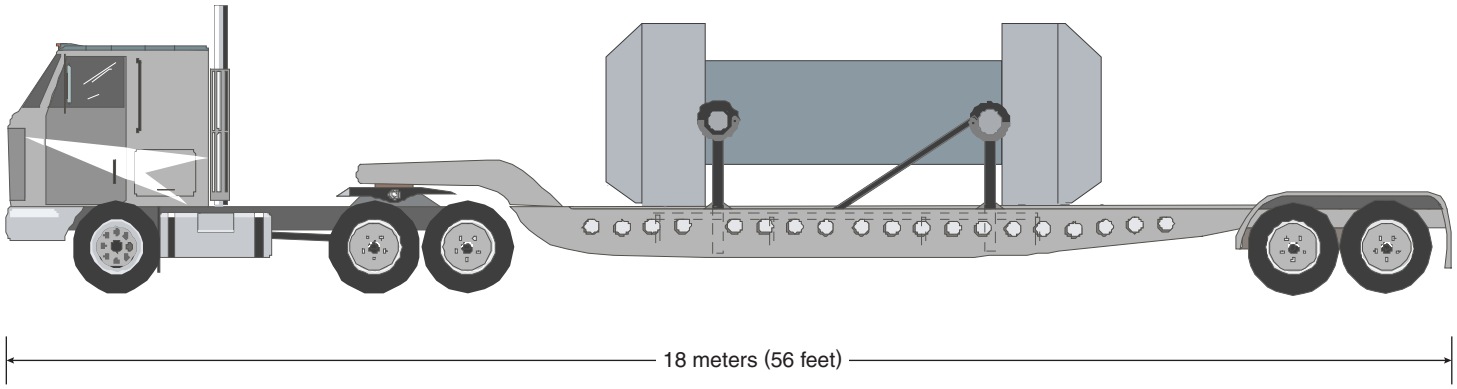

Source: DIRS 104782-Kelderhouse (1999, p. 7).

Figure 2-20. Artist's conception of a truck cask on a legal-weight tractor-trailer truck.

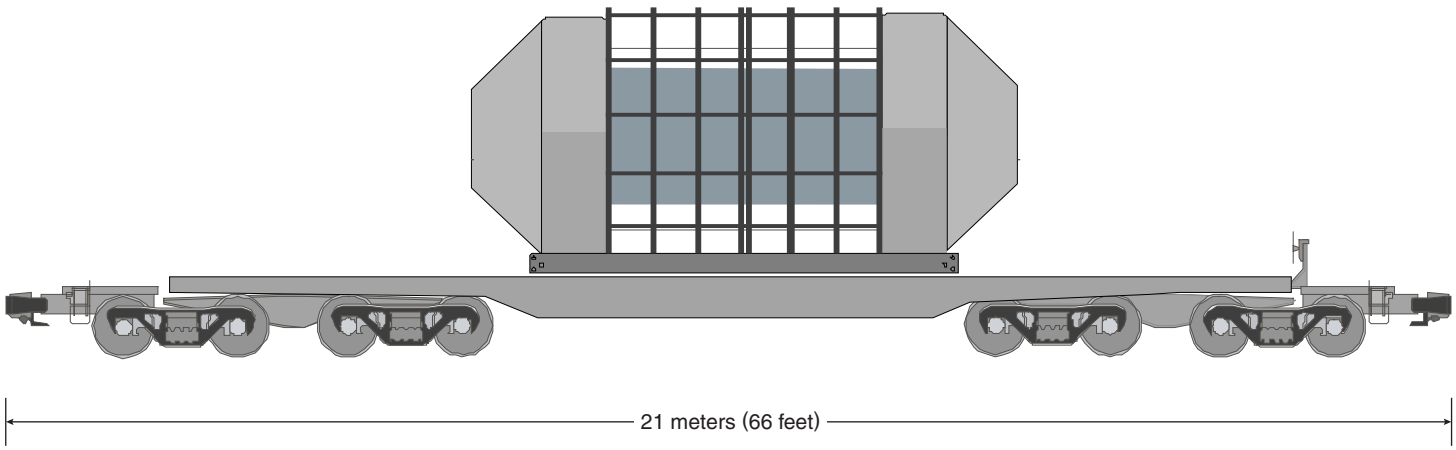

Source: DIRS 104782-Kelderhouse (1999, p. 8).

Figure 2-21. Artist's conception of a large rail cask on a railcar.

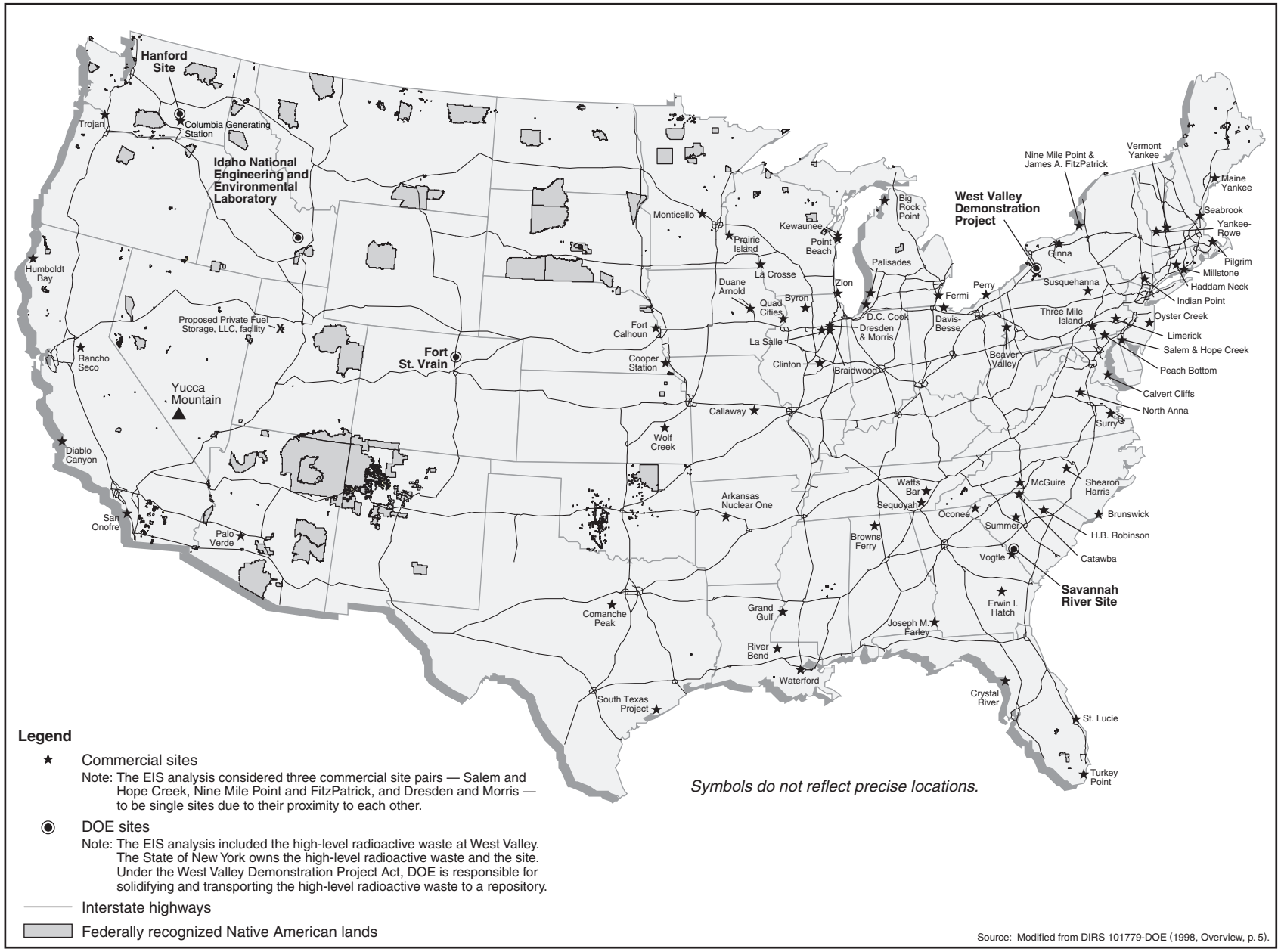

Figure 2-22a. Commercial and DOE sites and Yucca Mountain in relation to the U.S. Interstate Highway System.

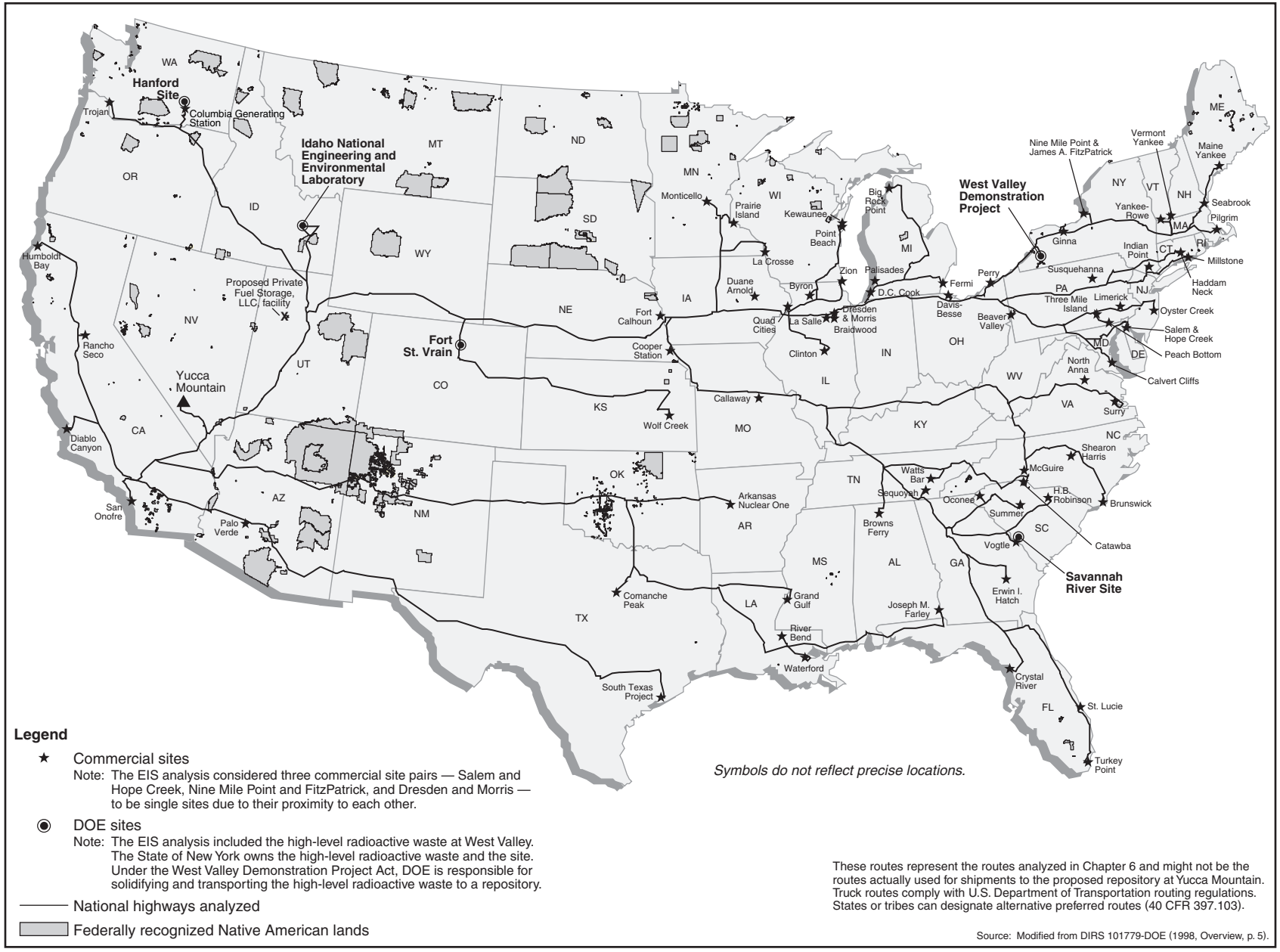

Figure 2-22b. Representative truck routes from commercial and DOE sites to Yucca Mountain analyzed for the Proposed Action.

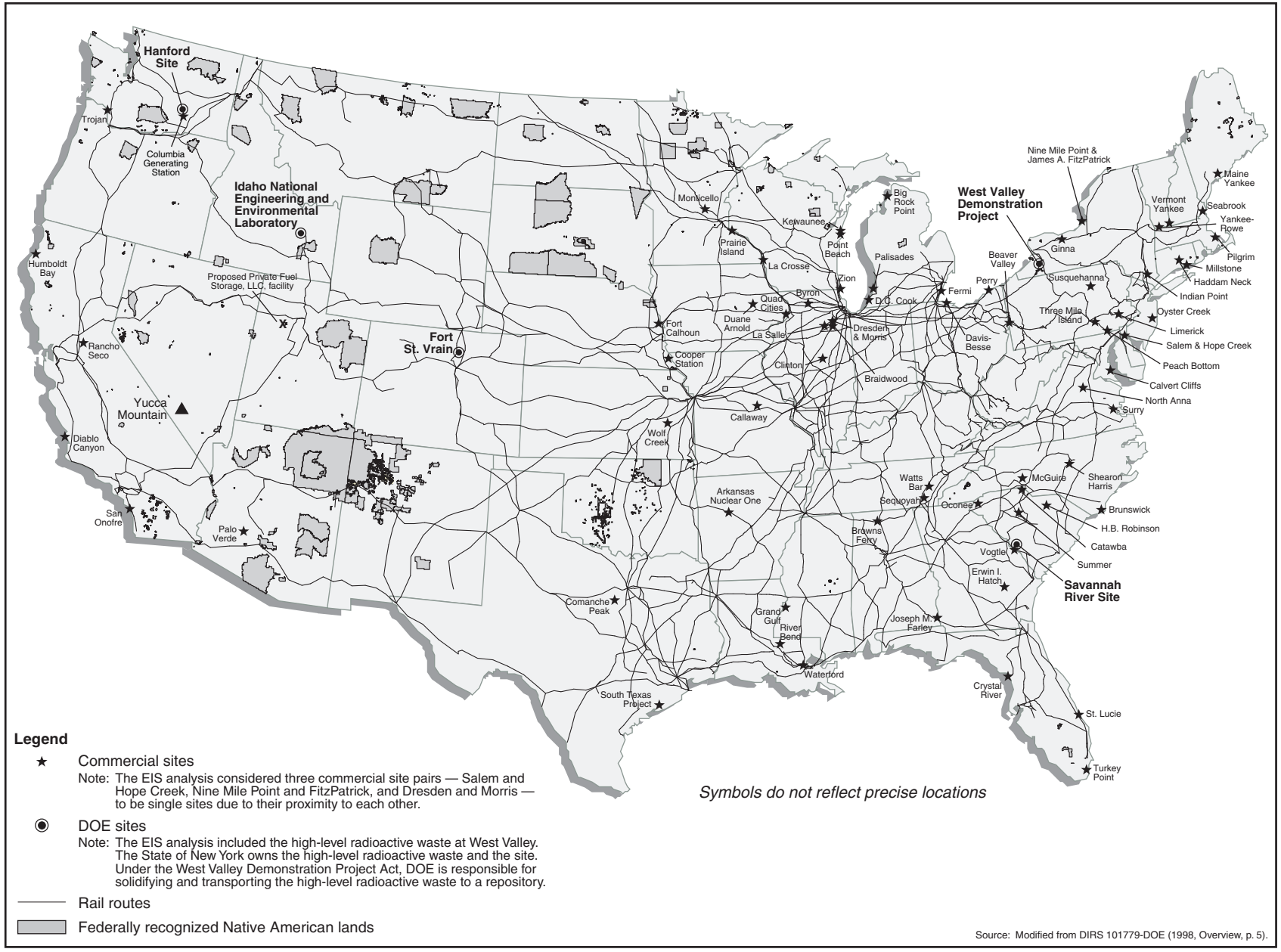

Figure 2-23a. Commercial and DOE sites and Yucca Mountain in relation to the U.S. railroad system.

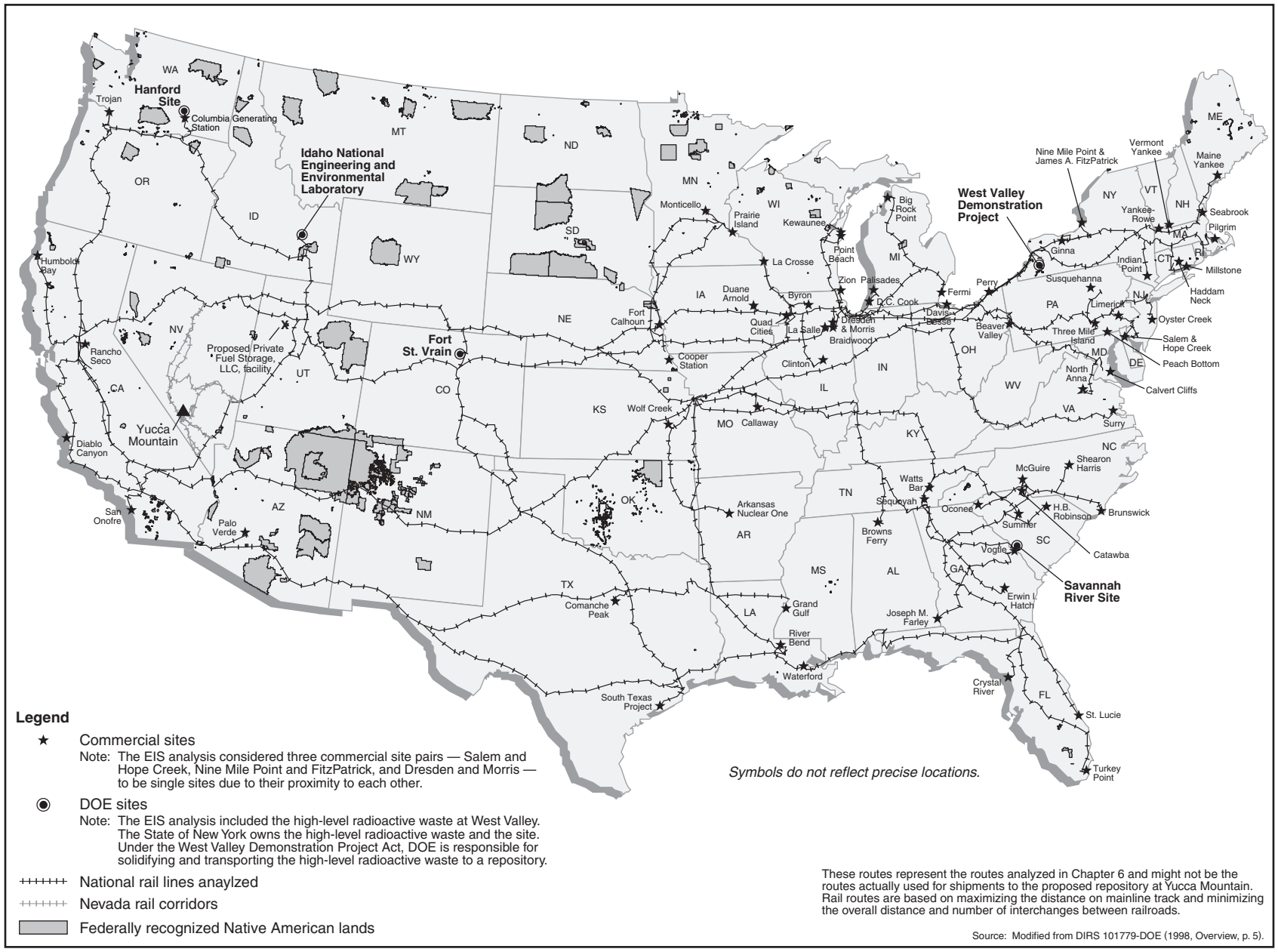

Figure 2-23b. Representative rail routes from commercial and DOE sites to Yucca Mountain analyzed for the Proposed Action.

sites that did not have rail access to a nearby rail access point. Such sites on navigable waterways could use barges to deliver spent nuclear fuel to a nearby rail access point. The transportation of spent nuclear fuel and high-level radioactive waste to the repository would comply with applicable regulations of the U.S. Department of Transportation and the Nuclear Regulatory Commission, as well as applicable state and local regulations.

DOE would use a satellite-based transportation tracking and communications system (such as TRANSCOM), to track current truck and rail shipments of spent nuclear fuel and high-level radioactive waste to the repository. This or a similar system could provide users (for example, DOE, the Nuclear Regulatory Commission, and state and tribal governments) with information about shipments to the repository and would enable communication between the vehicle operators and a central communication station. Additional escorts are required for shipments in heavily populated areas. In these areas, armed escorts would be required for highway and rail shipments (10 CFR 73.37). The use of a satellite-based communication and tracking system, such as TRANSCOM, is subject to Nuclear Regulatory Commission approval. Under Nuclear Regulatory Commission regulations, specific information about shipments, such as time of departure and location during travel, must not be publicly disclosed and is only available to officials designated by state governors. In addition, notification and sharing of shipment information with Native American tribes is the subject of a proposed Nuclear Regulatory Commission rulemaking.

Section 180(c) of the NWPA requires DOE to provide technical and financial assistance to states and tribes for training public safety officials in jurisdictions through which it plans to transport spent nuclear fuel and high-level radioactive waste. The training is to include procedures for the safe routine transportation of these materials and for emergency response. DOE is developing the policy and procedures for implementing this assistance and has started discussions with the appropriate organizations. The Department would institute these plans before beginning shipments to the repository.

In the event of an incident involving a shipment of spent nuclear fuel or high-level radioactive waste, the transportation carrier would notify local authorities and the central communications station monitoring the shipment. DOE would make resources available to local authorities as appropriate to mitigate such an incident.

2.1.3.2.1 *National Transportation Shipping Scenarios*

DOE would ship spent nuclear fuel and high-level radioactive waste from commercial and DOE sites using some combination of the legal-weight truck, rail, heavy-haul truck, and barge modes of transport. This EIS considers two national transportation mode-mix scenarios, which for simplicity are referred to as the mostly legal-weight truck scenario and the mostly rail scenario. These scenarios encompass the broadest range of operating conditions relevant to potential impacts to human health and the environment. Table 2-3 summarizes these scenarios, and Appendix J provides additional details.

Table 2-3. National transportation scenarios (percentage based on number of shipments).[a]

Material[a]	Mostly legal-weight truck	Mostly rail
Commercial SNF	100% by legal-weight truck	About 90% by rail; about 10% by legal-weight truck
HLW	100% by legal-weight truck	100% by rail
DOE SNF	Mostly legal-weight truck; includes about 300 naval SNF shipments from INEEL to Nevada by rail	100% by rail

a. SNF = spent nuclear fuel; HLW = high-level radioactive waste; INEEL = Idaho National Engineering and Environmental Laboratory.

2.1.3.2.2 *Mostly Legal-Weight Truck Shipping Scenario*

Under this scenario, DOE would ship all high-level radioactive waste and most spent nuclear fuel from commercial and DOE sites to the Yucca Mountain site by legal-weight truck. About 53,000 shipments of these materials would travel on the Nation's Interstate Highway System during a 24-year period. There would be about 41,000 commercial spent nuclear fuel shipments and about 12,000 shipments of DOE spent nuclear fuel and high-level radioactive waste. The exception would be about 300 shipments of naval spent nuclear fuel that would travel from the Idaho National Engineering and Environmental Laboratory to Nevada by rail. The Department of the Navy prepared an EIS (DIRS 101941-USN 1996, all) and issued two Records of Decision (62 *FR* 1095, January 8, 1997; 62 *FR* 23770, May 1, 1997) on its spent nuclear fuel.

Truck shipments would use Nuclear Regulatory Commission-certified, reusable shipping casks secured on legal-weight trucks (Figure 2-20). With proper labels and vehicle placards (hazard identification) and vehicle and cask inspections, a truck carrying a shipping cask of spent nuclear fuel or high-level radioactive waste would travel to the repository on highway routes selected in accordance with U.S. Department of Transportation regulations (49 CFR 397.101), which require the use of *preferred routes*. These routes include the Interstate Highway System, including beltways and bypasses. Alternative preferred routes could be designated by states and tribes following Department of Transportation regulations (49 CFR 397.103) that require consideration of the overall risk to the public and prior consultation with affected local jurisdictions and with any other affected states.

Shipments of naval spent nuclear fuel would travel by rail in reusable rail shipping casks certified by the Nuclear Regulatory Commission. These shipments would use applicable and appropriate placards and inspection procedures.

2.1.3.2.3 *Mostly Rail Shipping Scenario*

Under this scenario, DOE would ship most spent nuclear fuel and high-level radioactive waste to Nevada by rail, with the exception of material from commercial nuclear sites that do not have the capability to load large-capacity rail shipping casks. Those sites would ship spent nuclear fuel to the repository by legal-weight truck. Commercial sites that have the capability to load large-capacity rail shipping casks but do not have immediate rail access could use heavy-haul trucks or barges to transport their spent nuclear fuel to a nearby rail line. Under this scenario, about 9,000 to 10,000 railcars of spent nuclear fuel and high-level radioactive waste would travel on the nationwide rail network over a period of 24 years. Rail shipments would consist of Nuclear Regulatory Commission-certified, reusable shipping casks secured on railcars (see Figure 2-21). In addition, there would be about 1,000 legal-weight truck shipments. All shipments would be marked with the appropriate labels and placards and would be inspected in accordance with applicable regulations.

Some of the logistics of rail transportation to the repository would depend on whether DOE used general or *dedicated freight service*. General freight shipments of spent nuclear fuel and high-level radioactive waste would be part of larger trains carrying other commodities. A number of transfers between trains could occur as a railcar traveled to the repository. The basic infrastructure and activities would be similar between general freight and dedicated trains. However, dedicated train service would contain only railcars destined for the repository. In addition to railcars carrying spent nuclear fuel or high-level radioactive waste, there would be buffer and *escort cars*, in accordance with Federal regulations. DOE would use a satellite-based system to monitor all spent nuclear fuel shipments (see Section 2.1.3.2).

TERMS RELATED TO RAIL SHIPPING

General freight rail service: A railroad freight service that handles a number of shippers and commodities. Railcars carrying spent nuclear fuel or high-level radioactive waste could switch in railyards or on sidings to a number of trains as they traveled from commercial and DOE sites to Nevada.

Dedicated freight rail service: A railroad freight service that provides exclusive service to a shipper and often involves transportation of a single commodity. Use of a separate train with its own crew carrying spent nuclear fuel or high-level radioactive waste would avoid switching railcars between trains.

Buffer cars: Railcars placed in front and in back of those carrying spent nuclear fuel or high-level radioactive waste to provide additional distance from possibly occupied railcars. Federal regulations (49 CFR 174.85) require the separation of a railcar carrying spent nuclear fuel or high-level radioactive waste from a locomotive, occupied caboose, or carload of undeveloped film by at least one buffer car. These could be DOE railcars or, in the case of general freight service, commercial railcars.

Escort cars: Railcars in which escort personnel (for example, security personnel) would reside on trains carrying spent nuclear fuel or high-level radioactive waste.

2.1.3.3 Nevada Transportation

Nevada transportation is part of national transportation, but the EIS discusses it separately to highlight aspects of interest to Nevada. Depending on how a shipment was transported, DOE could use one of three options or modes of transportation in Nevada to reach the Yucca Mountain site: legal-weight trucks, rail, or heavy-haul trucks. Legal-weight truck shipments arriving in Nevada would travel directly to the Yucca Mountain site. Potential routes for legal-weight truck shipments in Nevada would comply with U.S. Department of Transportation regulations (49 CFR 397.101) for selecting “preferred routes” and “delivery routes” for motor carrier shipments of highway route-controlled quantities of radioactive materials. The State of Nevada could designate alternative routes as specified in 49 CFR 397.103. Two interstate highways cross Nevada—I-80 in the north and I-15 in the south. I-15, the closest interstate highway to the proposed repository, travels through Salt Lake City, Utah, to southern California, passing through Las Vegas. Figure 2-24 shows the existing highway infrastructure in southern Nevada. The EIS analysis assumed that the proposed beltway around the urban core of Las Vegas (the Las Vegas Beltway) would be operational before 2010 and would be part of the Interstate Highway System.

Shipments arriving in Nevada by rail would travel to the repository site by rail or heavy-haul truck (legal-weight trucks could not be used due to the size and weight of the rail shipping casks). Existing rail lines in the State include two northern routes and one southern route; the Union Pacific Railroad owns both the northern and the southern routes. The northern routes pass through or near the cities of Elko, Carlin, Battle Mountain, and Reno. The southern route runs through Salt Lake City, Utah, to Barstow, California, passing through Caliente, Las Vegas, and Jean, Nevada. Figure 2-25 shows the Nevada rail infrastructure. Rail access is not currently available to the Yucca Mountain site, so DOE would have to build a branch rail line from an existing mainline railroad to the site or transfer rail casks to heavy-haul trucks at an intermodal transfer station for transport to the repository. In addition, some highways that DOE would use for heavy-haul trucks would need to be upgraded.

To indicate distinctions between available transportation options or modes in Nevada and to define the range of potential impacts associated with transportation in the State, this EIS analyzes three

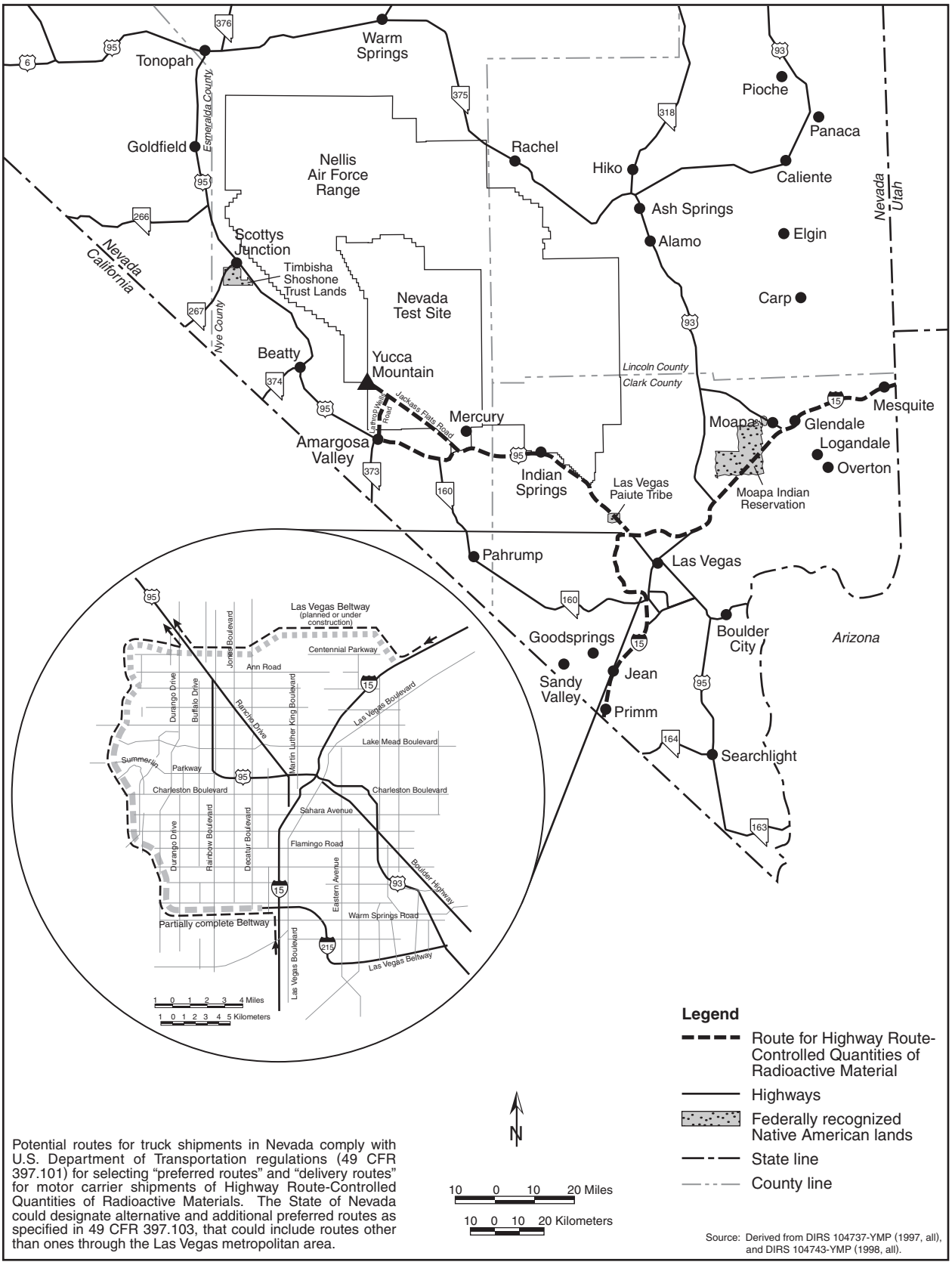

Potential routes for truck shipments in Nevada comply with U.S. Department of Transportation regulations (49 CFR 397.101) for selecting "preferred routes" and "delivery routes" for motor carrier shipments of Highway Route-Controlled Quantities of Radioactive Materials. The State of Nevada could designate alternative and additional preferred routes as specified in 49 CFR 397.103, that could include routes other than ones through the Las Vegas metropolitan area.

Figure 2-24. Potential Nevada routes for legal-weight truck shipments of spent nuclear fuel and high-level radioactive waste to Yucca Mountain.

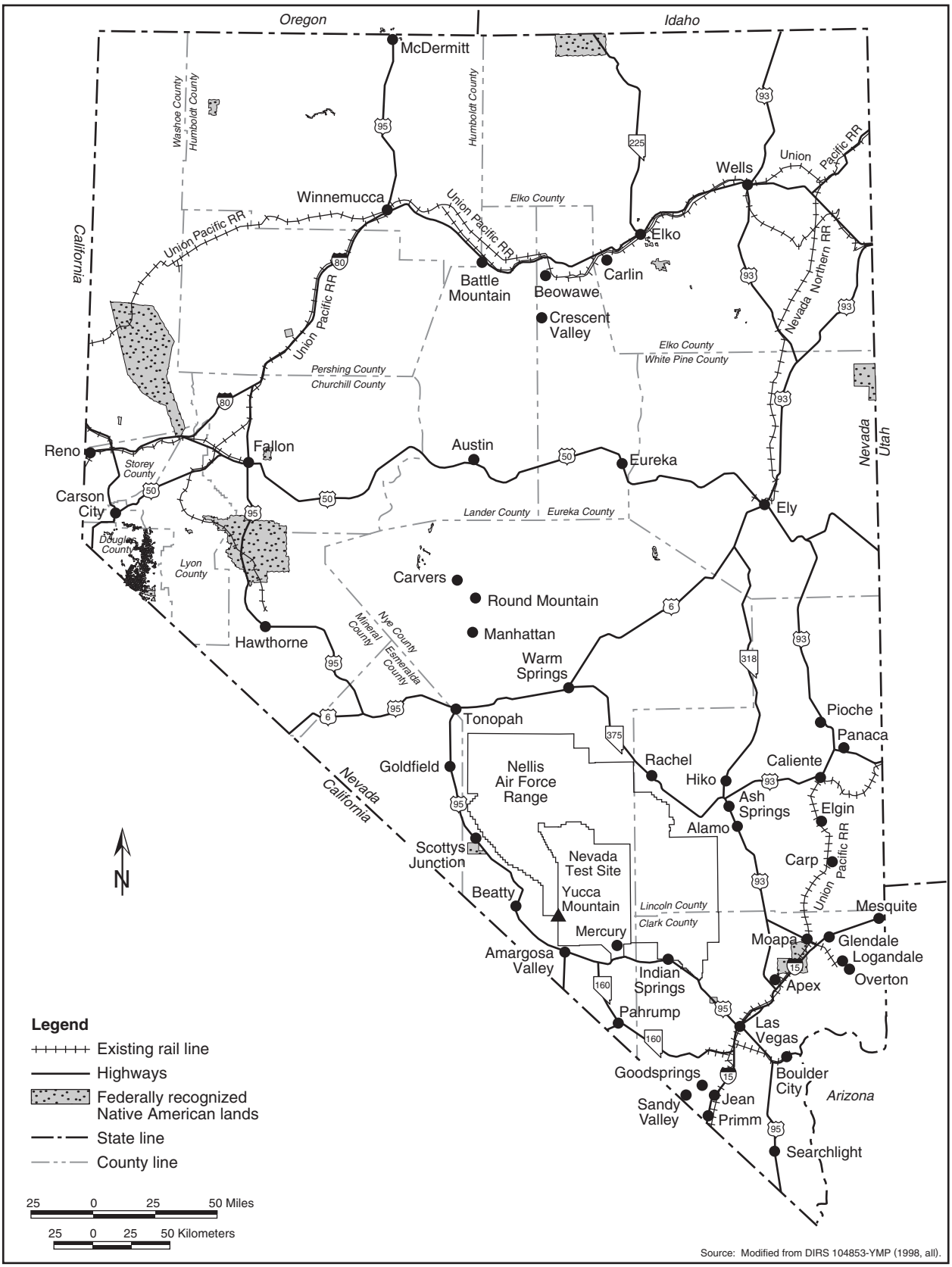

Figure 2-25. Existing Nevada rail lines.

transportation scenarios: the first, associated with the national mostly legal-weight truck scenario, is a Nevada legal-weight truck scenario; the second and third, both associated with the national mostly rail scenario, are rail transport directly to the Yucca Mountain site, and an intermodal transfer from railcar to heavy-haul truck for travel to the site. Table 2-4 summarizes the Nevada transportation scenarios.

Table 2-4. Nevada transportation shipping scenarios (percentage based on number of shipments).[a]

Material	Mostly legal-weight truck	Mostly rail	Mostly heavy-haul truck[b]
Commercial SNF	100% by legal-weight truck	About 90% by rail; about 10% by legal-weight truck	About 90% by heavy-haul truck; about 10% by legal-weight truck
HLW	100% by legal-weight truck	100% by rail	100% by heavy-haul truck
DOE SNF	Mostly by legal-weight truck; includes about 300 naval SNF shipments by rail and heavy-haul truck	100% by rail	100% by heavy-haul truck

a. SNF = spent nuclear fuel; HLW = high-level radioactive waste.
b. Rail shipment to intermodal transfer station, and heavy-haul truck shipment from intermodal transfer station to the repository.

The following sections describe the Nevada transportation scenarios and the implementing alternatives DOE is considering for a new branch rail line or a new intermodal transfer station and associated highway route for heavy-haul trucks.

2.1.3.3.1 *Nevada Legal-Weight Truck Scenario*

Under this scenario, DOE would use legal-weight trucks in Nevada to transport spent nuclear fuel and high-level radioactive waste to the repository. Naval spent nuclear fuel would be transported to Nevada by rail. In Nevada, DOE would use heavy-haul trucks to transport these 300 shipments. DOE would establish an intermodal transfer capability and an associated heavy-haul shipment capability (see Section 2.1.3.3.3).

Legal-weight truck shipments would use existing routes that satisfy regulations of the U.S. Department of Transportation for the shipment of highway route-controlled quantities of radioactive materials (49 CFR 397.101). Legal-weight trucks would enter Nevada on I-15 from the north or south, bypass the Las Vegas area on the proposed beltway, and travel north on U.S. 95 to the Nevada Test Site and then to the Yucca Mountain site (Figure 2-24).

2.1.3.3.2 *Nevada Rail Scenario*

Under this scenario, DOE would construct and operate a branch rail line in Nevada. Based on previous studies (described in Section 2.3.3.1), DOE has narrowed its consideration for a new branch rail line to five potential rail corridors—Caliente, Carlin, Caliente-Chalk Mountain, Jean, and Valley Modified. These rail corridors are shown on Figure 2-26 and are described in the following paragraphs. DOE has analyzed a 0.4-kilometer (0.25-mile)-wide corridor for each alternative. As shown in Figure 2-26, there are possible corridor *variations*, which are described further in Appendix J.

- *Caliente Rail Corridor Implementing Alternative.* The Caliente corridor originates at an existing siding to the Union Pacific mainline railroad near Caliente, Nevada (Figure 2-26). Depending on the variations that DOE could use, the corridor is between 512 kilometers (318 miles) and 553 kilometers (331 miles) long from the Union Pacific line connection to the Yucca Mountain site.

- *Carlin Rail Corridor Implementing Alternative.* The Carlin corridor originates at the Union Pacific main line railroad near Beowawe in north-central Nevada (Figure 2-26). The Carlin and Caliente corridors converge near the northwest boundary of the Nellis Air Force Range (also known as the Nevada Test and Training Range). Past this point, they are identical. Depending on the variations

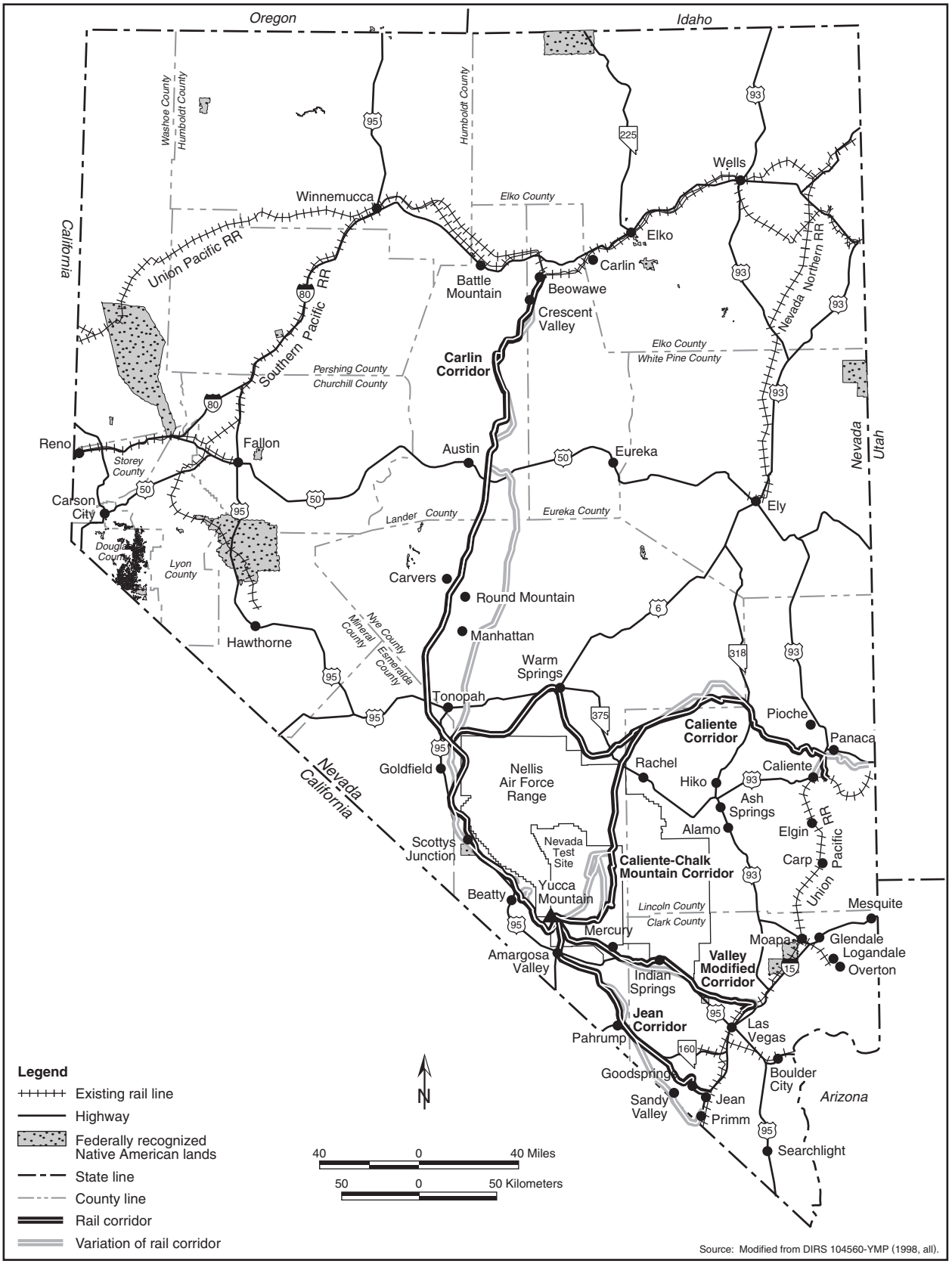

Figure 2-26. Potential Nevada rail routes to Yucca Mountain.

that DOE could use, the corridor has two major *options*—Big Smoky Valley and Monitor Valley. The Big Smoky Valley Option is between 513 kilometers (319 miles) and 529 kilometers (329 miles) long from the tie-in point with the Union Pacific line to the Yucca Mountain site. Depending on the variation used, the Monitor Valley Option is between 525 kilometers (326 miles) and 544 kilometers (338 miles) long.

- *Caliente-Chalk Mountain Rail Corridor Implementing Alternative.* The Caliente-Chalk Mountain corridor is identical to the Caliente corridor until it approaches the northern boundary of the Nellis Air Force Range. At that point the Caliente-Chalk Mountain corridor turns south through the Nellis Air Force Range and the Nevada Test Site to the Yucca Mountain site (Figure 2-26). Depending on the variations that DOE could use, the corridor is between 344 kilometers (214 miles) and 382 kilometers (242 miles) long from the tie-in point at the Union Pacific line to the Yucca Mountain site.

- *Jean Rail Corridor Implementing Alternative.* The Jean corridor originates at the existing Union Pacific mainline railroad near Jean, Nevada (Figure 2-26). The corridor has two major alignment options–Wilson Pass and Stateline Pass. The Wilson Pass Option is between 181 kilometers (112 miles) and 186 kilometers (116 miles) long from the tie-in point at the Union Pacific line to the Yucca Mountain site. The Stateline Pass Option is between 198 kilometers (123 miles) and 204 kilometers (127 miles) long.

- *Valley Modified Rail Corridor Implementing Alternative.* The Valley Modified corridor originates at an existing rail siding off the Union Pacific mainline railroad northeast of Las Vegas. Depending on the variation that DOE could use, the corridor is between 157 kilometers (98 miles) and 163 kilometers (101 miles) long from the tie-in point with the Union Pacific line to the Yucca Mountain site.

2.1.3.3.2.1 Rail Line Construction. The selected rail line would be designed and built in compliance with Federal Railroad Administration safety standards. In addition, a service road along the rail line would be built and maintained. Rail line construction along any of the corridors would take between 3 and 4 years. Construction would start after the selection of a route, completion of engineering and environmental studies related to alignment within the related corridor, completion of the rail line design, and land acquisition.

Construction activities would include the development of *construction support areas*; construction of access roads to the rail line construction initiation points and to major structures to be built, such as bridges; and movement of equipment to the construction initiation points. The number and location of construction initiation points would be based on such variables as the route selected, the length of the line, the construction schedule, the number of contractors used for construction, the number of structures to be built, and the locations of existing access roads adjacent to the rail line.

The construction of a rail line would require the clearing and excavation of previously undisturbed lands in the corridor and the establishment of borrow and *spoils areas* outside the corridor. To establish a stable platform for the rail track, construction crews would excavate some areas and fill (add more soil to) others, as determined by terrain features. To the extent possible, material excavated from one area would be used in areas that required fill material. However, if the distance to an area requiring fill material was excessive, the excavated material would be disposed of in adjacent low areas, and a *borrow area* would be established adjacent to the area requiring fill material. Access roads to spoils and borrow areas would be built during the track platform construction work.

Typical heavy-duty construction equipment (front-end loaders, power shovels, and other diesel-powered support equipment) would be used for clearing and excavation work. Trucks would spray water along graded areas for dust control and soil compaction. The fill material used along the rail line to establish a

stable platform for the track would be compacted to meet design requirements. Water could be shipped from other locations or obtained from wells drilled along the route.

Railroad track construction would consist of the placement of railbed material, ties, rail, and ballast (support and stabilizing materials for the rail ties) over the completed railbed platform. Other activities would include the following:

- Installation of at-grade crossings (which would require rerouting existing utility lines in some areas)
- Installation of fences along the rail line, if requested by other agencies (for example, the Bureau of Land Management or the Fish and Wildlife Service)
- Installation of the train control system (monitoring equipment, signals, communications equipment)
- Final grading of slopes, installation of rock-fall protection devices, replacement of topsoil, revegetation and installation of other permanent erosion control systems, and completion of the adjacent maintenance road

2.1.3.3.2.2 Rail Line Operations. Branch rail line operations from the junction with the main line to the proposed repository at Yucca Mountain would meet Federal Railroad Administration standards for maintenance, operations, and safety. Current plans for the branch rail line anticipate a train with two 3,000-horsepower, diesel-electric locomotives; from one to five railcars containing spent nuclear fuel and high-level radioactive waste; *buffer cars*; and escort cars. Trains could also haul other freight to and from the repository site, thereby decreasing the truck traffic on local roads. The EIS analyses assumed that all repository construction materials and equipment would be transported to the Yucca Mountain site by truck.

The operational interface between the Union Pacific and the branch rail line would be determined by whether the waste was shipped to Nevada by dedicated rail service or by *general freight rail service*. With dedicated rail or general freight service to Nevada, the railcars carrying spent nuclear fuel or high-level radioactive waste could be parked on a side track (off the main rail line) at the connection point until a train could be assembled to travel to the repository site. A small secure railyard off the main rail line would be established for switching operations. Railcars with spent nuclear fuel or high-level radioactive waste would have to be moved within 48 hours in accordance with U.S. Department of Transportation regulations (49 CFR 174.14).

This EIS assumes there would be about four trains per week for shipments of spent nuclear fuel and high-level radioactive waste to the repository. In addition, the rail line would enable the transport of other material to the repository, including empty disposal containers, bulk concrete materials, steel, large equipment, and general building materials. The EIS assumes one train per week for this other material for a total of about five trains per week to the repository from about 2010 to 2033.

2.1.3.3.3 *Nevada Heavy-Haul Truck Scenario*

Under this scenario, rail shipments to Nevada would go to an intermodal transfer station where shipping casks would transfer from railcars to heavy-haul trucks. The heavy-haul trucks would travel on existing roads to the repository, once the roads were appropriately upgraded. The following sections describe the implementing alternatives (the intermodal transfer station locations and associated highway routes for heavy-haul trucks) that the EIS analyzes.

2.1.3.3.3.1 Intermodal Transfer Stations. To enable intermodal transfers and heavy-haul shipments to the repository, an intermodal transfer station would be built and operated in Nevada. DOE

is considering three potential locations for intermodal transfer operations: near Caliente, northeast of Las Vegas (Apex/Dry Lake), and southwest of Las Vegas (Sloan/Jean) (Figure 2-27). DOE has identified general areas at these three locations where it could build and operate an intermodal transfer station:

- *Caliente Intermodal Transfer Station Implementing Alternative*. The Caliente siting areas are south of Caliente in the Meadow Valley Wash. DOE has identified two possible areas along the west side of the wash.

- *Apex/Dry Lake Intermodal Transfer Station Implementing Alternative*. The areas for a potential station are northeast of Las Vegas along the Union Pacific Railroad's main line at Dry Lake and Apex. Three areas are available for intermodal transfer station siting. The first area is directly adjacent to the Dry Lake siding along the west side of the Union Pacific line. The second area is smaller and lies on the same side of the tracks a short distance northeast of the first area. The third area is between Interstate 15 and the Union Pacific tracks south of where the tracks cross the Interstate. Because this area is between the Dry Lake and Apex sidings, the construction of an additional rail siding would be necessary.

- *Sloan/Jean Intermodal Transfer Station Implementing Alternative*. The potential areas for an intermodal transfer station southwest of Las Vegas are between the existing Union Pacific rail sidings at Sloan and Jean. One area is on the west side of I-15, north of the Union Pacific rail underpass at I-15. The second is south of the Sloan rail siding along the east side of the rail line. A third area is south of the second, directly north of the Jean interchange on I-15.

The intermodal transfer station would be a fenced area of about 250 meters (820 feet) by 250 meters and a rail siding that would be about 2 kilometers (1.2 miles) long (see Figure 2-28). The estimated total area occupied by the facility and support areas would be about 0.2 square kilometer (50 acres). It would include rail tracks, two shipping cask transfer cranes (one on a gantry rail, and one on a backup rubber-tired vehicle), an office building, and a maintenance and security building. It would also have connection tracks to the existing Union Pacific line and storage and transfer tracks inside the station boundary. The maintenance building would provide space for routine service and minor repairs to the heavy-haul trailers and tractors. The station would have power, water, and other services. Diesel generators would provide a backup electric power source. Construction of an intermodal transfer station would take an estimated 1.5 years.

Trains would switch from the main Union Pacific track to an existing or newly constructed passing track. The railcars carrying casks of spent nuclear fuel or high-level radioactive waste would be uncoupled from the train and switched to the intermodal transfer station track. The train would return to the main Union Pacific line. A railyard locomotive would move the cars containing the casks to the station.

The loading and unloading process would begin with the return of a heavy-haul truck from the repository. The empty cask returning from the repository would be lifted from the truck, loaded on an empty railcar, and secured. The gantry or mobile crane would then remove a loaded cask from another railcar and transfer it to the same truck, where it would be secured and inspected before shipment to the repository.

The station would accept railcars as they arrived (24 hours a day, 7 days a week), but it would normally dispatch heavy-haul trucks during early morning daylight hours on weekdays, consistent with current Nevada heavy-haul shipment practices.

Intermodal transfer station operations would not depend on whether the railcars that carried spent nuclear fuel and high-level radioactive waste arrived on dedicated or general freight trains.

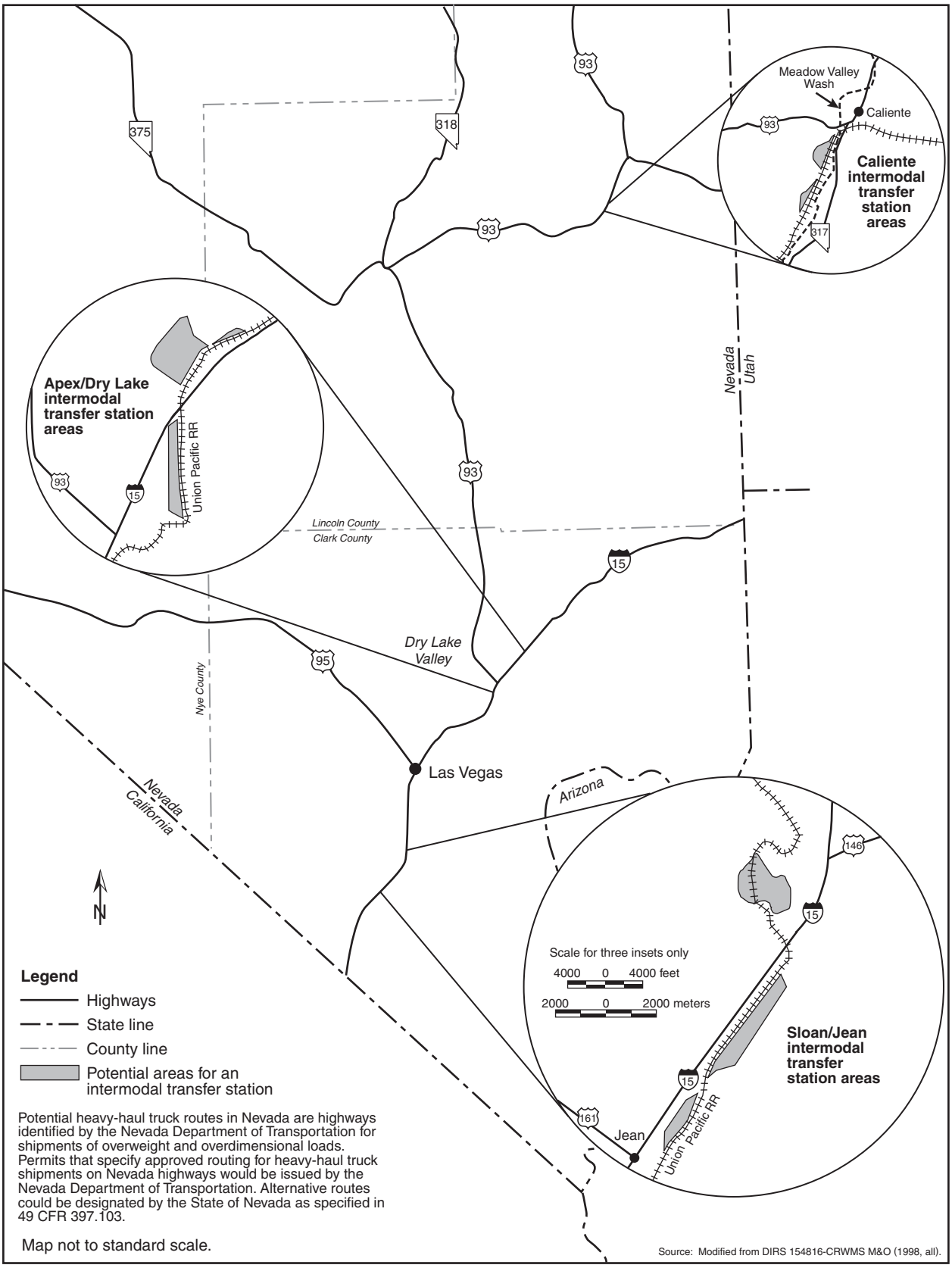

Figure 2-27. Potential intermodal transfer station locations.

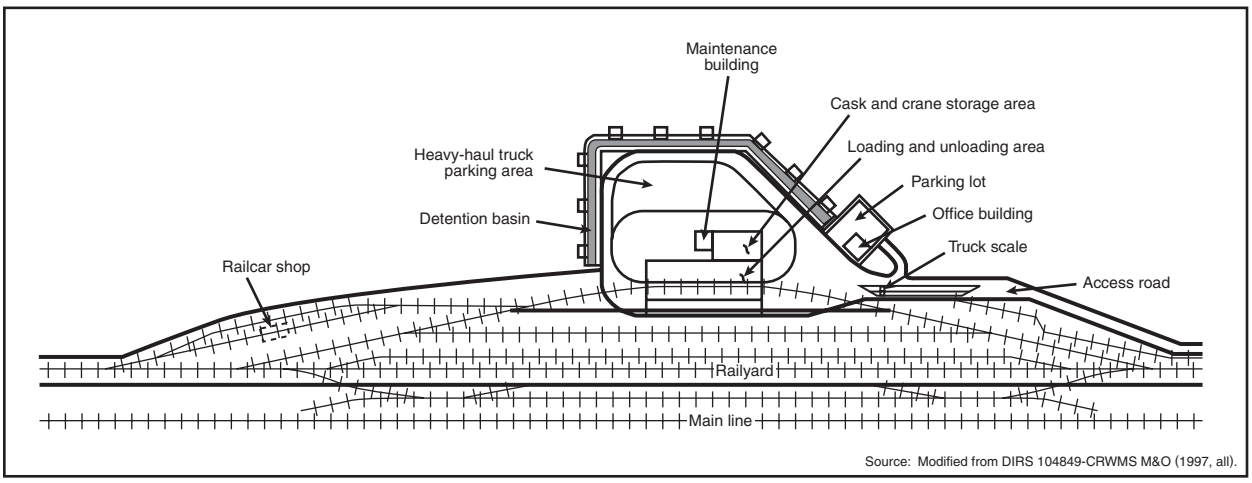

Figure 2-28. Conceptual diagram of intermodal transfer station layout.

At the completion of the 24 years of shipping, the intermodal transfer station would be decommissioned and, if possible, reused.

2.1.3.3.3.2 Highway Routes for Heavy-Haul Shipments. Figure 2-29 is an illustration of a heavy-haul truck that DOE could use to transport spent nuclear fuel and high-level radioactive waste to the repository. The heavy-haul truck would weigh about 91,000 kilograms (200,000 pounds) unloaded and would be up to 67 meters (220 feet) long. It would be custom-built for repository shipments. Typical range of open-road speeds would be 32 to 80 kilometers (20 to 50 miles) per hour.

Heavy-haul truck shipments from an intermodal transfer station to the repository would comply with U.S. Department of Transportation requirements for shipments of highway route-controlled quantities of radioactive materials (49 CFR Part 177) and with State of Nevada permit requirements for heavy-haul shipments. Nevada permits heavy-haul shipments on Monday through Friday (excluding holidays) but only in daylight hours.

Road upgrades for candidate routes, if necessary, would involve four kinds of construction activities: (1) widening the shoulders and constructing turnouts and truck lanes, (2) upgrading intersections that are inadequate for heavy-haul truck traffic, (3) increasing the asphalt thickness (overlay) of some sections, and (4) upgrading engineered structures such as culverts and bridges. The overlay work would include upgrades needed to remove frost restrictions from some road sections.

Shoulder widening and the construction of turnouts and truck lanes would occur as needed along the side of the existing pavement. Shoulders would be widened from 0.33 or 0.66 meter (1 or 2 feet) to 1.2 meters (4 feet). Widening would build the existing shoulder up to pavement height. Truck lanes would be built on roadways with grades exceeding 4 percent. Turnout lanes would be built approximately every 8 to 32 kilometers (5 to 20 miles) depending on projected traffic. The truck lanes and turnouts would require land clearing and soil excavation or fill to establish the roadway. Culverts under the roadway would be lengthened. DOE assumes that most borrow material for construction could come from existing Nevada Department of Transportation borrow areas. Asphalt could be produced at a portable plant in the borrow areas. Appendix J contains descriptions of the specific highway improvements for the five routes.

The following paragraphs describe the potential highway routes for heavy-haul trucks DOE is considering for the intermodal transfer station location and unique operational considerations for each route.

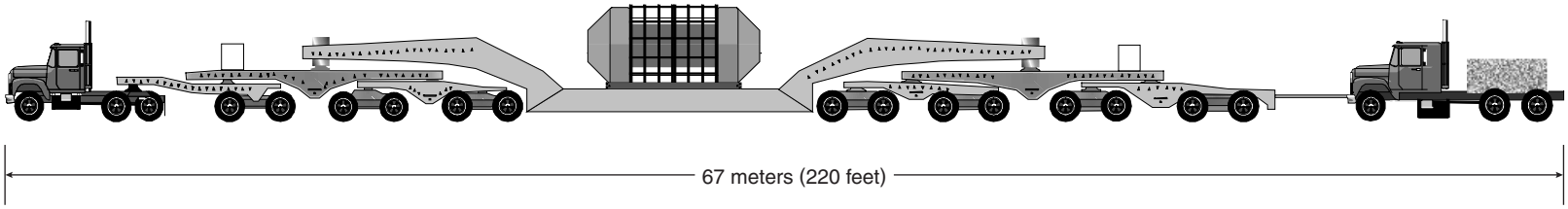

Source: DIRS 104782-Kelderhouse (1999, p. 2).

Figure 2-29. Artisit's conception of a heavy-haul truck carrying a rail shipping cask.

- *Caliente Intermodal Transfer Station Highway Routes*. Heavy-haul trucks leaving the Caliente intermodal transfer station could travel on one of three potential routes: (1) Caliente, (2) Caliente/Chalk Mountain, and (3) Caliente/Las Vegas (see Figure 2-30).

  The Caliente route would be approximately 533 kilometers (331 miles) long. Heavy-haul trucks leaving an intermodal transfer station in the Caliente area would travel directly from the station to U.S. Highway 93. The trucks would travel west on U.S. 93 to State Route 375, then on State Route 375 to the intersection with U.S. Highway 6. The trucks would continue on U.S. 6 to the intersection with U.S. 95 in Tonopah, then into Beatty on U.S. 95, where an *alternate* truck route would be built because the existing intersection is too constricted to allow a turn. Heavy-haul trucks would then travel south on U.S. 95 to the Lathrop Wells Road exit, which accesses the Yucca Mountain site. Because of the estimated travel time associated with the Caliente route and the restriction on nighttime travel for heavy-haul vehicles, DOE would construct a parking area along the route to enable these vehicles to park overnight. This parking area would be near the U.S. 6 and U.S. 95 interchange at Tonopah.

  The Caliente/Chalk Mountain route would be approximately 282 kilometers (175 miles) long. Heavy-haul trucks leaving an intermodal transfer station in the Caliente area would travel directly from the station to U.S. 93. The trucks would travel on U.S. 93 to State Route 375, on State Route 375 to Rachel, and head south through the Nellis Air Force Range to the Nevada Test Site.

  The Caliente/Las Vegas route would be approximately 376 kilometers (234 miles) long. Heavy-haul trucks leaving an intermodal transfer station in the Caliente area would travel directly from the station to U.S. 93. The trucks would travel south on U.S. 93 to the intersection with I-15, northeast of Las Vegas. The trucks would travel south on I-15 to the exit for the proposed northern Las Vegas Beltway, then would travel west on the beltway. They would leave the beltway at U.S. 95, and head north on U.S. 95 to the Nevada Test Site. The trucks would travel on Jackass Flats Road on the Nevada Test Site to the Yucca Mountain site.

- *Apex/Dry Lake Intermodal Transfer Station Highway Route*. Heavy-haul trucks would leave the intermodal transfer station at the Apex/Dry Lake location and enter I-15 at the Apex interchange. The trucks would travel south on I-15 to the exit to the proposed northern Las Vegas Beltway, and would travel west on the beltway. The trucks would leave the beltway at U.S. 95, and travel north on U.S. 95 to the Nevada Test Site. They would then travel on Jackass Flats Road on the Nevada Test Site to the Yucca Mountain site. This route is about 183 kilometers (114 miles) long (see Figure 2-30).

- *Sloan/Jean Intermodal Transfer Station Highway Route*. Heavy-haul trucks leaving a Sloan/Jean intermodal transfer station would enter I-15 at the Sloan interchange. The trucks would travel on I-15 to the exit to the southern portion of the proposed Las Vegas Beltway, and then travel northwest on the beltway. They would leave the beltway at U.S. 95, and travel to the Nevada Test Site. They would then travel on Jackass Flats Road to the Yucca Mountain site. This route would be approximately 190 kilometers (118 miles) long (see Figure 2-30).

2.1.3.4 Shipping Cask Manufacturing, Maintenance, and Disposal

To transport spent nuclear fuel and high-level radioactive waste to the repository, DOE would use existing or new shipping casks that met Nuclear Regulatory Commission regulations (10 CFR Part 71). One or more qualified companies that provide specialized metal structures, tanks, and other heavy equipment would manufacture new shipping casks. The number and type of shipping casks required would depend on the predominant mode of transportation.

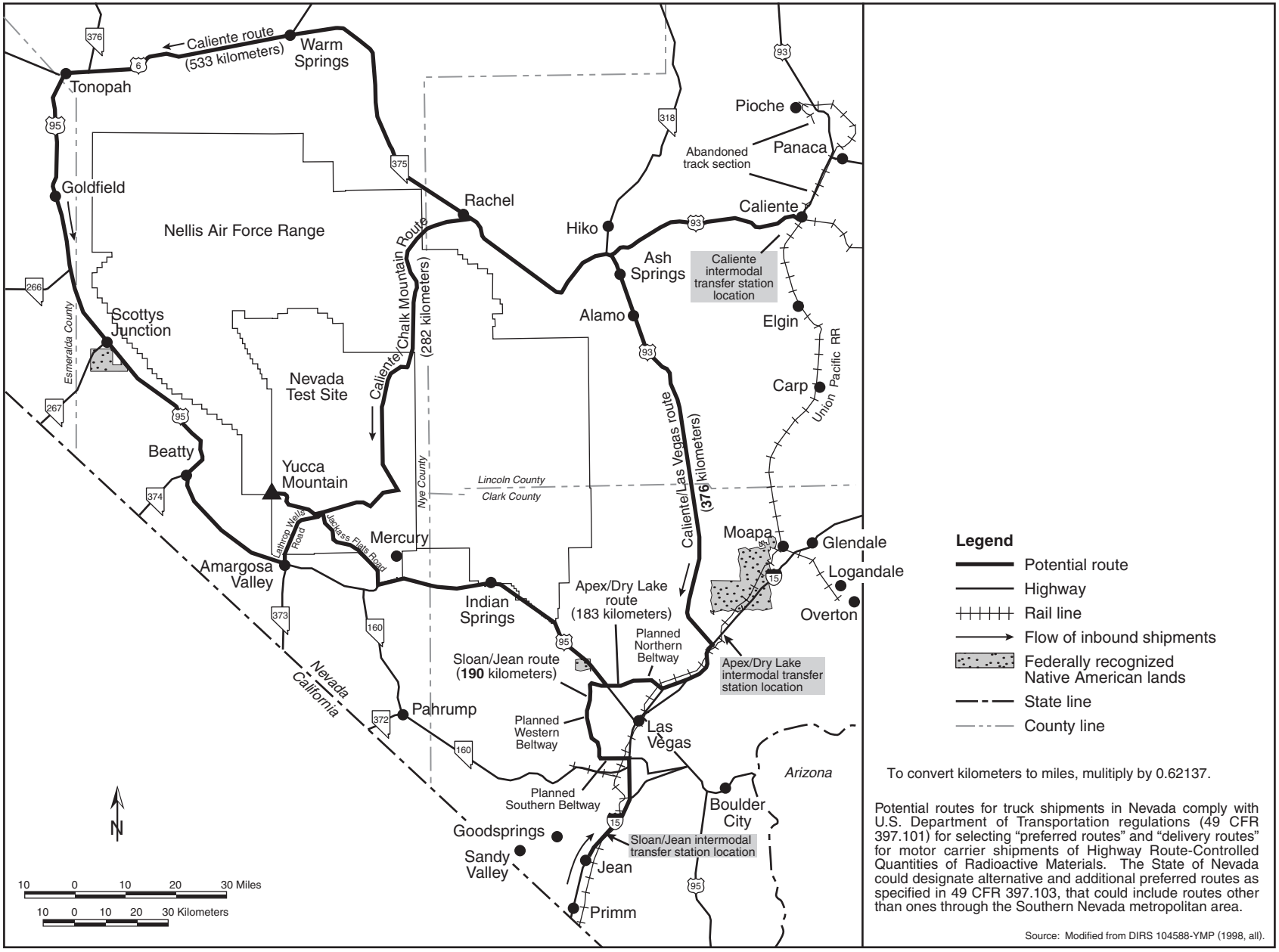

Figure 2-30. Potential routes in Nevada for heavy-haul trucks.

DOE would remove casks from service periodically for maintenance and inspection. These activities would occur at a cask maintenance facility(s) where cask functions and components would be checked and inspected in compliance with Nuclear Regulatory Commission requirements and preventive maintenance procedures. The major operations involved in cask maintenance would include decontamination, replacement of limited-life components such as O-rings, and verification of radiation *shielding* integrity, structural integrity, and heat transfer efficiency.

The large number of repository shipments would require new facilities for cask maintenance. DOE has not decided where in the United States it would locate a cask maintenance facility(s), but this EIS assumes that such a facility would be at the repository inside the Restricted Area at the North Portal on approximately 0.01 square kilometer (2.5 acres). Minor cask maintenance activities could occur at commercial or DOE sites.

2.1.4 ALTERNATIVE DESIGN CONCEPTS AND DESIGN FEATURES

DOE used the preliminary design concept in the *Viability Assessment of a Repository at Yucca Mountain* (DIRS 101779-DOE 1998, all), referred to as the Viability Assessment reference design, to evaluate impacts in the Draft EIS. While it was preparing the Draft EIS, DOE considered a broad range of design features and alternatives that would enhance the VA reference design within the License Application Design Selection process (DIRS 107292-CRWMS M&O 1999, all). In addition, the features and alternatives were combined into groups called *enhanced design alternatives*, each of which defined a unique design concept for the repository. DOE anticipated choosing an enhanced design alternative that it could carry forward to the licensing process.

The final *License Application Design Selection Report* (DIRS 107292-CRWMS M&O 1999, all) recommended Enhanced *Design Alternative* II (EDA II) to carry forward in the design evolution. However, DOE did specify that backfill should be only a possible option in EDA II. Accordingly, DOE adopted EDA II without backfill as the design to be evaluated for the purpose of making a determination on site recommendation, as documented in the Science and Engineering Report (DIRS 153849-DOE 2001, all). EDA II without backfill, over a range of thermal operating modes, was evaluated in the Supplement to the Draft EIS and is also the basis for this Final EIS.

The following section qualitatively discusses potential future design features and alternatives. Appendix E provides further detail on alternative design concepts and alternatives and their potential environmental impacts.

2.1.4.1 Design Features and Alternatives To Control the Thermal/Moisture Environment in the Repository and To Limit Release and Transport of Radionuclides

Through successive evaluations and improvements, the repository design has evolved to the flexible design. This represents the current state of the ongoing process that identifies and develops ideas through conceptual, then preliminary, then more detailed designs to produce a design that DOE would use for purposes of the Secretary of Energy's determination of whether to recommend approval of the Yucca Mountain site to the President for development of a geologic repository. Coupled with information from ongoing scientific tests and investigations, the design process continues to provide insights into how to improve repository performance and reduce uncertainties in performance projections.

A key to the determination on site recommendation is demonstrating whether a repository at Yucca Mountain would be likely to meet regulatory standards. To that end, scientific tests and studies identify and quantify uncertainties in performance assessment and confirm performance projections. Due to limitations in the understanding of natural processes that might occur over thousands of years, as well as the limits on being able to characterize the site fully, uncertainties in performance assessments can never

be completely eliminated. DOE believes that the natural system and the robust flexible design would accommodate unquantified and residual uncertainties through performance margin (design and safety) and defense-in-depth. *Defense-in-depth* is a design approach that relies on a series of barriers, both natural and manmade, that would work in a complementary manner to minimize the amount of radioactive material that could eventually travel from the repository to the human environment.

Refining details of the design of the proposed repository is an ongoing and progressive process [see the Science and Engineering Report (DIRS 153849-DOE 2001, Section 2.1.2)]. As more information becomes available about the site, along with results from tests to evaluate the implementation of the design, DOE will continue to refine the repository design. To increase the level of confidence in the understanding of long-term repository behavior, scientific tests would continue throughout the periods before and during License Application (if the site was recommended and approved for development as a repository), construction authorization, repository operations, and performance monitoring. With the flexibility inherent in the design, periodic reviews of the results of the ongoing testing program and other design activities could prompt further design feature modifications.

As described in this chapter, DOE is considering a number of scenarios and operating modes, which are defined by key parameters that include the number of waste packages, spacing between waste packages, whether there would be surface aging, average linear thermal load, average maximum waste package temperature, emplacement period, emplacement area, length of emplacement and access drifts (as well as total excavated volume), drift spacing, and ventilation (forced-air and natural).

As an example of ongoing studies, DOE is examining the use of an extended period of natural ventilation of emplacement drifts after a period of forced-air ventilation. The heat generated by the spent nuclear fuel and high-level radioactive waste could develop and maintain a temperature difference to drive passive ventilation of the emplacement drifts throughout the maximum time the repository would remain open. The heat from the waste could be used to draw cooler, drier external air through the intake shafts, across the emplacement drifts, and out the exhaust shafts (located at an elevation above the intakes), much the way heat from a fireplace draws air from a room and exhausts it through a chimney. Passive ventilation is used to regulate air temperature in buildings and has similar uses in large subsurface structures such as mines. Findings in numerous caves that are analogous to a deep geologic repository (DIRS 153849-DOE 2001, Section 2.1.5.4) support the idea that the environment of a naturally ventilated underground system could, under certain conditions, preserve materials for several thousand years and could greatly reduce waste package degradation. Optimizing the repository design to accommodate natural ventilation could result in a reconfigured supply and exhaust scheme, additional shafts, and air control devices for the drifts. Changes at the surface would include additional Ventilation Shaft Operations Areas associated with ventilation and exhaust shafts, as well as access roads to the additional shaft locations.

Drift spacing could be greater or smaller than that presented for the analytical scenarios, and could influence the size of the emplacement area and the length of emplacement and access drifts, as well as the total excavated underground volume (see DIRS 153849-DOE 2001, Section 2.1.4). Drift spacing versus waste package spacing is a design trade-off to achieve lower heat output per unit volume of a repository. The effect of drift spacing on these related parameters would be less than the effect of waste package spacing in the analytical scenarios discussed in this EIS. Therefore, DOE did not perform a *quantitative* evaluation of the environmental impacts of variable drift spacing.

2.1.4.2 Design Features and Alternatives to Support Operational and Cost Considerations

Uncertainties in future funding profiles or the order of spent nuclear fuel or high-level radioactive waste shipments could result in development of the repository in a sequential or modular manner (that is,

constructing the surface and subsurface facilities in portions, or "modules"). This approach would facilitate the ability to incorporate "lessons learned" from initial work into subsequent modules, reduce initial construction costs and investment risk, and potentially increase confidence in meeting the schedule for waste receipt and emplacement. DOE has requested that the National Research Council continue the study of possible repository development strategies (DIRS 153849-DOE 2001, Section 2.1.3).

2.1.5 ESTIMATED COSTS ASSOCIATED WITH THE PROPOSED ACTION

DOE has estimated the total cost of the Proposed Action to construct, operate and monitor, and close a geologic repository at Yucca Mountain, including the transportation of spent nuclear fuel and high-level radioactive waste to the repository (DIRS 156900-DOE 2001, all). The estimate is based on acceptance and disposal of about 63,000 MTHM of commercial spent nuclear fuel, 2,333 MTHM of DOE spent nuclear fuel, and 8,315 canisters of solidified high-level radioactive waste (4,667 MTHM). Table 2-5 lists the estimated costs. The total future costs from 2002 to closure for the flexible design would range from about $42.7 to $57.3 billion (in 2001 dollars). DOE is reporting future costs for comparison with the No-Action Alternative. Historical costs through 2001 are $8.8 billion (in 2001 dollars). The costs are representative and would vary somewhat, depending on the operating mode, packaging and transportation scenarios, and the Nevada transportation implementing alternative selected.

Table 2-5. Proposed Action costs from 2002 to closure.[a,b]

Description	Operating mode	
	Higher-temperature	Lower-temperature
Monitored geologic repository	31.5	37.4 - 43.1
Waste acceptance, storage, and transportation	4.3	4.3
Nevada transportation	0.8	0.8
Program integration	2.2	2.4 - 3.7
Institutional	3.9	4.1 - 5.4
Total	***$42.7***	***$49.0 - 57.3***

a. Source: DIRS 156900-DOE (2001, all).
b. Adjusted to 2001 dollars, in billions per DIRS 156899-DOE (2001, Appendix A).

The activities comprising the cost elements, Monitored Geologic Repository; Waste Acceptance, Storage and Transportation; and Nevada Transportation in Table 2-5 are described in this EIS. The last two elements are Program Integration and Institutional. Program Integration includes Quality Assurance (which is a mandatory program to identify and ensure implementation of requirements that protect the health and safety of the public, workers, and environment), Program Management and Integration, and non-Office of Civilian Radioactive Waste Management costs associated with the NRC, Nuclear Waste Technical Review Board, and the Nuclear Waste Negotiator. Institutional includes financial assistance for transportation planning. Details about the estimated costs are in *Analysis of the Total System Life Cycle Cost of the Civilian Radioactive Waste Management Program* (DIRS 153255-DOE 2001, all) and *Life Cycle Cost Analysis for Repository Flexible Design Concepts* (DIRS 156900-DOE 2001, all). These reports provide further information on the basis of the estimates, time phasing of the expected expenditures, and the subdivision of the costs between the major activities noted in Table 2-5. For example, the cost to engineer and construct the repository would be approximately equivalent to the estimated program costs from 2002 to 2010 (proposed repository opening), or $8.3 to $9.1 billion (in 2001 dollars).

The most recent estimates show that approximately 70 percent of the repository-related costs would be paid from the Nuclear Waste Fund (fees collected by nuclear utilities from ratepayers) and about 30 percent from taxpayer revenues (primarily to pay for disposal of DOE spent nuclear fuel and high-level radioactive waste).

2.2 No-Action Alternative

This section describes the No-Action Alternative, which provides a basis for comparison with the Proposed Action. Under the No-Action Alternative, and consistent with the Nuclear Waste Policy Act, as amended [Section 113(c)(3) (the EIS refers to the amended Act as the NWPA)], DOE would terminate activities at Yucca Mountain and undertake site reclamation to mitigate any significant adverse environmental impacts. Commercial nuclear power utilities and DOE would continue to manage spent nuclear fuel and high-level radioactive waste at 77 sites in the United States (see Figure 2-31).

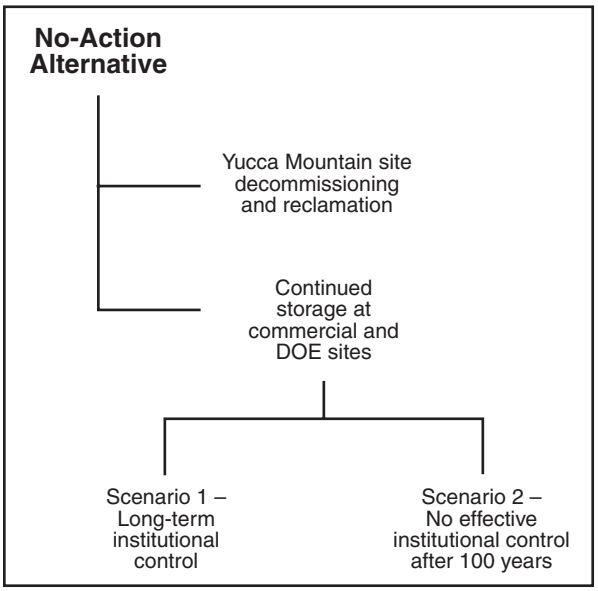

Figure 2-31. No-Action Alternative activities and analytical scenarios.

In addition, DOE would prepare a report to Congress with the Department's recommendations for further action to ensure the safe, permanent disposal of spent nuclear fuel and high-level radioactive waste, including the need for new legislative authority. Under any future course that would include continued storage at the generator sites, commercial utilities and DOE would have to continue managing spent nuclear fuel and high-level radioactive waste in a manner that protected public health and safety and the environment. However, the future course that Congress, DOE, and the commercial utilities would take if Yucca Mountain were not recommended as a repository remains uncertain. DOE recognizes that a number of possibilities could be pursued, including continued storage of spent nuclear fuel and high-level radioactive waste at one or more centralized locations, study and selection of another location for a deep geologic repository (Chapter 1 identifies the process and alternative sites previously selected by DOE for technical study as potential geologic repository locations), the development of new technologies (for example, transmutation), or reconsideration of alternatives to geologic disposal. The environmental considerations of these possibilities have been analyzed in other contexts in other documents to varying degrees.

The No-Action Alternative did not consider redistribution or centralizing of spent nuclear fuel. However, Table 7-1 lists several references to documents that have evaluated potential environmental impacts of away-from-reactor spent nuclear fuel consolidation facilities. In addition, because the Department believes that it is a reasonably foreseeable future action, the Final EIS includes an evaluation of potential cumulative transportation impacts associated with the shipment of 40,000 metric tons of heavy metal of commercial spent nuclear fuel to a proposed privately owned centralized storage facility at Skull Valley in Utah (see Section 8.4 for details).

In light of the uncertainties described above, DOE decided to illustrate the possibilities by focusing the analysis of the No-Action Alternative on the potential impacts of two scenarios:

- Long-term storage of spent nuclear fuel and high-level radioactive waste at the current sites with effective institutional control for at least 10,000 years (Scenario 1)

- Long-term storage at the current storage sites with no effective institutional control after about 100 years (Scenario 2)

Although these scenarios would be unlikely, they provide a basis for comparison to the impacts of the Proposed Action and they reflect a range of impacts that could occur.

The following sections describe expected Yucca Mountain site decommissioning and reclamation activities (Section 2.2.1), and further describe the scenarios for continued spent nuclear fuel and high-level radioactive waste management at the commercial and DOE sites (Section 2.2.2). Chapter 7 describes the potential environmental impacts of the No-Action Alternative.

2.2.1 YUCCA MOUNTAIN SITE DECOMMISSIONING AND RECLAMATION

Under the No-Action Alternative, site characterization activities would end at Yucca Mountain and decommissioning and reclamation would begin as soon as practicable and could take several years to complete. Decommissioning and reclamation would include removing or shutting down surface and subsurface facilities, and restoring lands disturbed during site characterization.

Portable and prefabricated buildings would be emptied of their contents, dismantled, and removed from the site. Other facilities could be shut down without being removed from the site. DOE would remove and salvage such equipment as electric generators and tunneling, ventilation, meteorological, and communications equipment. Foundations and similar materials would remain in place.

DOE would remove equipment and materials from the underground drifts and test rooms. Horizontal and vertical drill holes extending from the subsurface would be sealed. Subsurface drifts and rooms would not be backfilled, but would be left with the steel inverts in place. The North and South Portals would be gated to prohibit entry to the subsurface.

Excavated rock piles would be stabilized. Topsoil previously removed from the excavated rock pile area and stored in a stockpile would be returned and the areas would be revegetated. Areas disturbed by surface studies (drilling, trenching, *fault* mapping) or used during site characterization (borrow areas, laydown pads, etc.) would be restored. Fluid impoundments (mud pits, evaporation ponds) would be backfilled or capped as appropriate and reclaimed. Access roads throughout the site (paved or graveled) and parking areas would be left in place and would not be restored.

2.2.2 CONTINUED STORAGE OF SPENT NUCLEAR FUEL AND HIGH-LEVEL RADIOACTIVE WASTE AT COMMERCIAL AND DOE SITES

Under the No-Action Alternative, spent nuclear fuel and high-level radioactive waste would be managed at the 72 commercial and 5 DOE sites (the Hanford Site, the Idaho National Engineering and Environmental Laboratory, the Savannah River Site, Fort St. Vrain, and the West Valley Demonstration Project) (see Figure 1-1). The No-Action Alternative assumes that the spent nuclear fuel and high-level radioactive waste would be treated, packaged, and stored. The amount of spent nuclear fuel and high-level radioactive waste considered in this analysis is the same as that in the Proposed Action—70,000 MTHM, including 63,000 MTHM of commercial spent nuclear fuel, 2,333 MTHM of DOE spent nuclear fuel, and 8,315 canisters of solidified high-level radioactive waste (4,667 MTHM). This EIS assumes that the No-Action Alternative would start in 2002.

2.2.2.1 Storage Packages and Facilities at Commercial and DOE Sites

A number of designs for storage packages and facilities at the commercial and DOE sites would provide adequate protection to the environment from spent nuclear fuel and high-level radioactive waste. Because specific designs have not been identified for most locations, DOE selected a representative range of commercial and DOE designs for analysis as described in the following paragraphs.

Spent Nuclear Fuel Storage Facilities

Most commercial nuclear utilities currently store their spent nuclear fuel in water-filled basins (fuel pools) at the reactor site. Some utilities have built *independent spent fuel storage installations* in which they store spent nuclear fuel dry, above ground, in metal casks or in weld-sealed canisters inside reinforced concrete storage modules. Some utilities are planning to build independent spent fuel storage installations so they can proceed with decommissioning their nuclear plants and terminating their operating licenses (for example, the Rancho Seco and Trojan plants). Because utilities could elect to continue operations until their fuel pools are full and then cease operations, the EIS analysis originally considered ongoing wet storage in existing fuel pools to be a potentially viable option for spent nuclear fuel storage. However, dry storage is the preferred option for long-term spent nuclear fuel storage at commercial sites for the following reasons (DIRS 101899-NRC 1996, pp. 6-76 and 6-85):

- Dry storage is a safe economical method of storage.
- Fuel rods in dry storage are likely to be environmentally secure for long periods.
- Dry storage generates minimal, if any, amounts of low-level radioactive waste.
- Dry storage units are simpler and easier to maintain.

Accordingly, this EIS assumes that all commercial spent nuclear fuel would be in dry storage at independent spent fuel storage installations at existing locations. This includes spent nuclear fuel at sites that no longer have operating nuclear reactors. Figure 2-32 shows a photograph of a typical independent spent fuel storage installation at a commercial nuclear site. Although most utilities and DOE have not constructed independent spent fuel storage installations or designed dry storage containers, this analysis evaluated the impacts of storing all commercial and most DOE spent nuclear fuel in horizontal concrete storage modules (see Figure 2-33) on a concrete pad at the ground surface. Concrete storage modules have openings that allow outside air to circulate and remove the heat of radioactive decay. The analysis assumed that both pressurized-water reactor and *boiling-water reactor* spent nuclear fuel would have been loaded into a dry storage canister that would be placed inside the concrete storage module. Figure 2-34 shows a typical dry storage canister, which would consist of a stainless-steel outer shell, welded end plugs, pressurized helium internal environment, and criticality-safe geometry for 24 pressurized-water or 52 boiling-water reactor fuel assemblies.

The combination of the dry storage canister and the concrete storage module would provide safe storage of spent nuclear fuel as long as the fuel and storage facilities were properly maintained. The reinforced concrete storage module would provide shielding against the radiation emitted by the spent nuclear fuel. The concrete storage module would also provide protection from damage from such occurrences as aircraft crashes, earthquakes, and tornadoes.

This analysis assumed that DOE spent nuclear fuel at the Savannah River Site, Idaho National Engineering and Environmental Laboratory, and Fort St. Vrain would be stored dry, above ground in stainless-steel canisters inside concrete casks. In addition, it assumed that the design of DOE above-ground spent nuclear fuel storage facilities would be similar to the independent spent fuel storage installations at commercial nuclear sites.

The analysis assumed that DOE spent nuclear fuel at Hanford would be stored dry in below-grade storage facilities. The Hanford N-Reactor fuel would be stored in the Canister Storage Building, which would consist of three below-grade concrete vaults with air plenums for natural convective cooling. Storage tubes of *carbon steel* would be installed vertically in the vaults. Each storage tube, which would be able to accommodate two spent nuclear fuel canisters, would be closed and sealed with a shield plug. The vaults would be covered by a structural steel shelter.

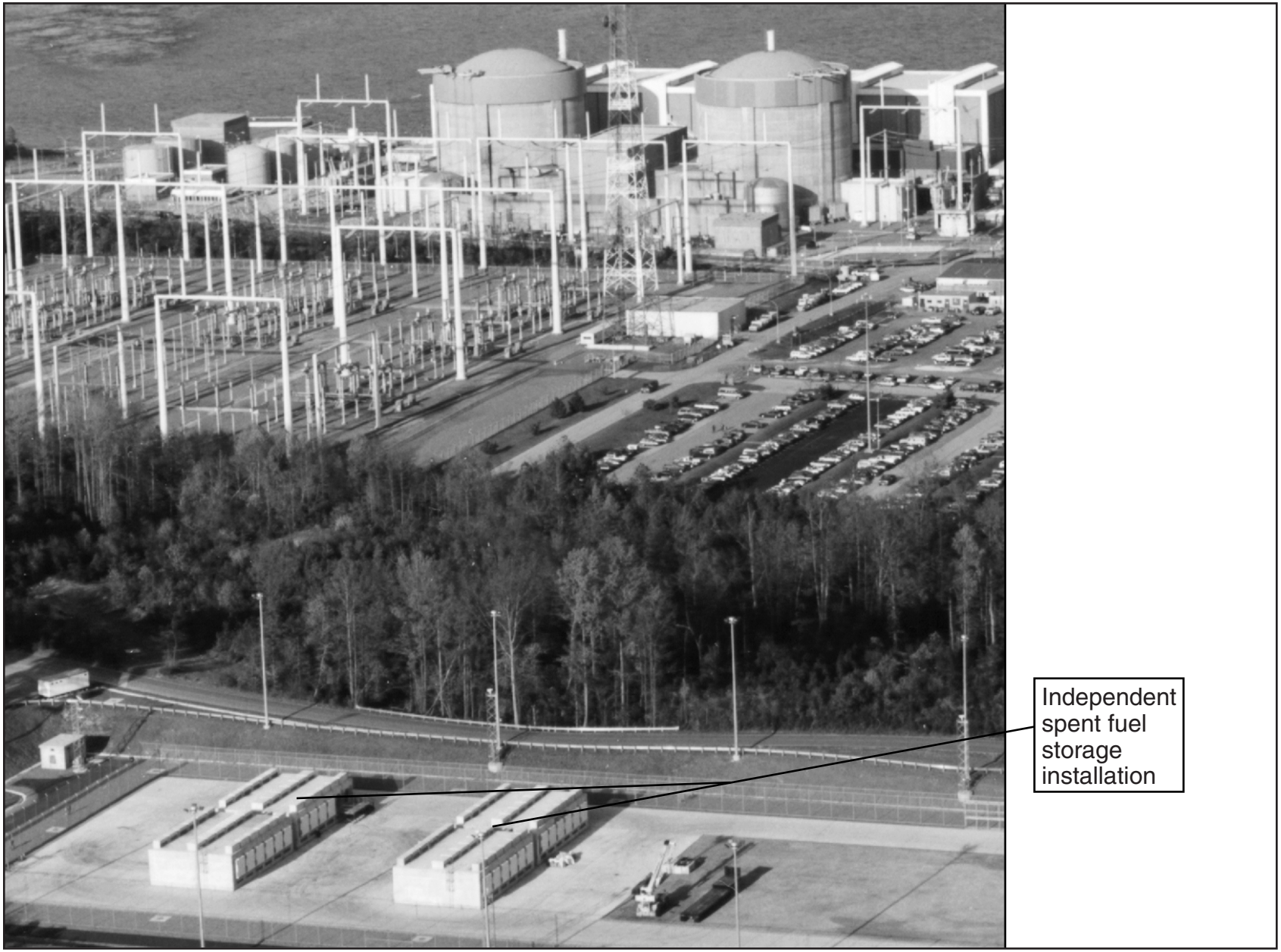

Figure 2-32. Typical independent spent fuel storage installation.

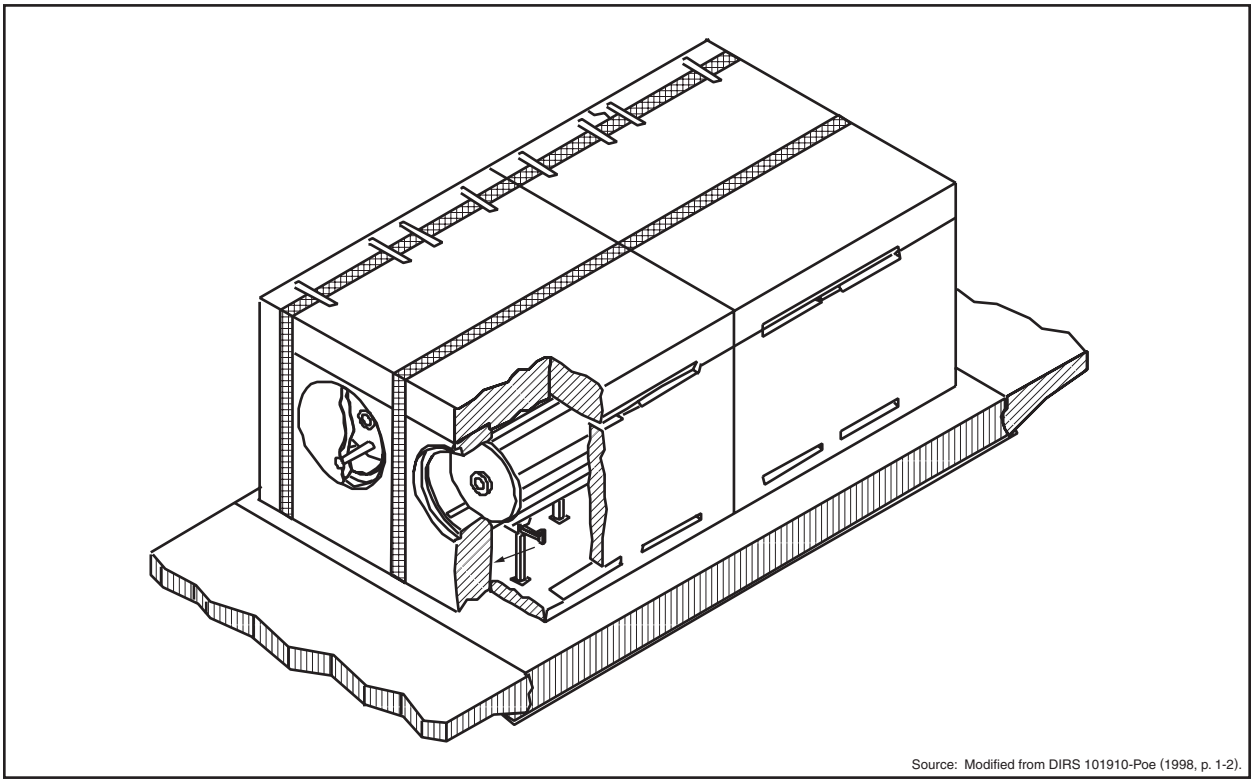

Figure 2-33. Spent nuclear fuel concrete storage module.

High-Level Radioactive Waste Storage Facilities

With one exception, this analysis assumed that high-level radioactive waste would be stored in a below-grade solidified high-level radioactive waste storage facility (Figure 2-35). At the West Valley Demonstration Project, it was assumed that DOE would use a dry storage system similar to a commercial spent nuclear fuel storage installation for high-level radioactive waste storage.

The high-level radioactive waste storage facility has four areas: below-grade storage vaults, an operating area above the vaults, air inlet shafts, and air exhaust shafts. The canister cavities are galvanized-steel large-diameter pipe sections arranged in a grid. Canister casings are supported by a concrete base mat. Space between the pipes is filled with overlapping horizontally stepped steel plates that direct most of the ventilation air through the storage cavities.

The below-grade storage vault would be below the operating floor, which would be slightly above grade. The storage vault would be designed to withstand earthquakes and tornadoes. In addition, the operating area would be enclosed by a metal building, which would provide weather protection and prevent the infiltration of precipitation. The storage vault would be designed to store the canisters and protect the operating personnel, the public, and the environment as long as the facilities were maintained. Radiation shielding would be provided by the surrounding earth, concrete walls, and a concrete deck that would form the floor of the operating area. Canister cavities would have individual precast concrete plugs.

Each vault would have an air inlet, air exhaust, and air passage cells. The heat of radioactive decay would be removed from around the canisters by the facility's forced air exhaust system. The exhaust air could be filtered with high-efficiency particulate air filters before it was discharged to the atmosphere through a stack, or natural *convection* cooling could be used with no filter. The oversize diameter of the pipe storage cavities would allow air passage around each cavity.

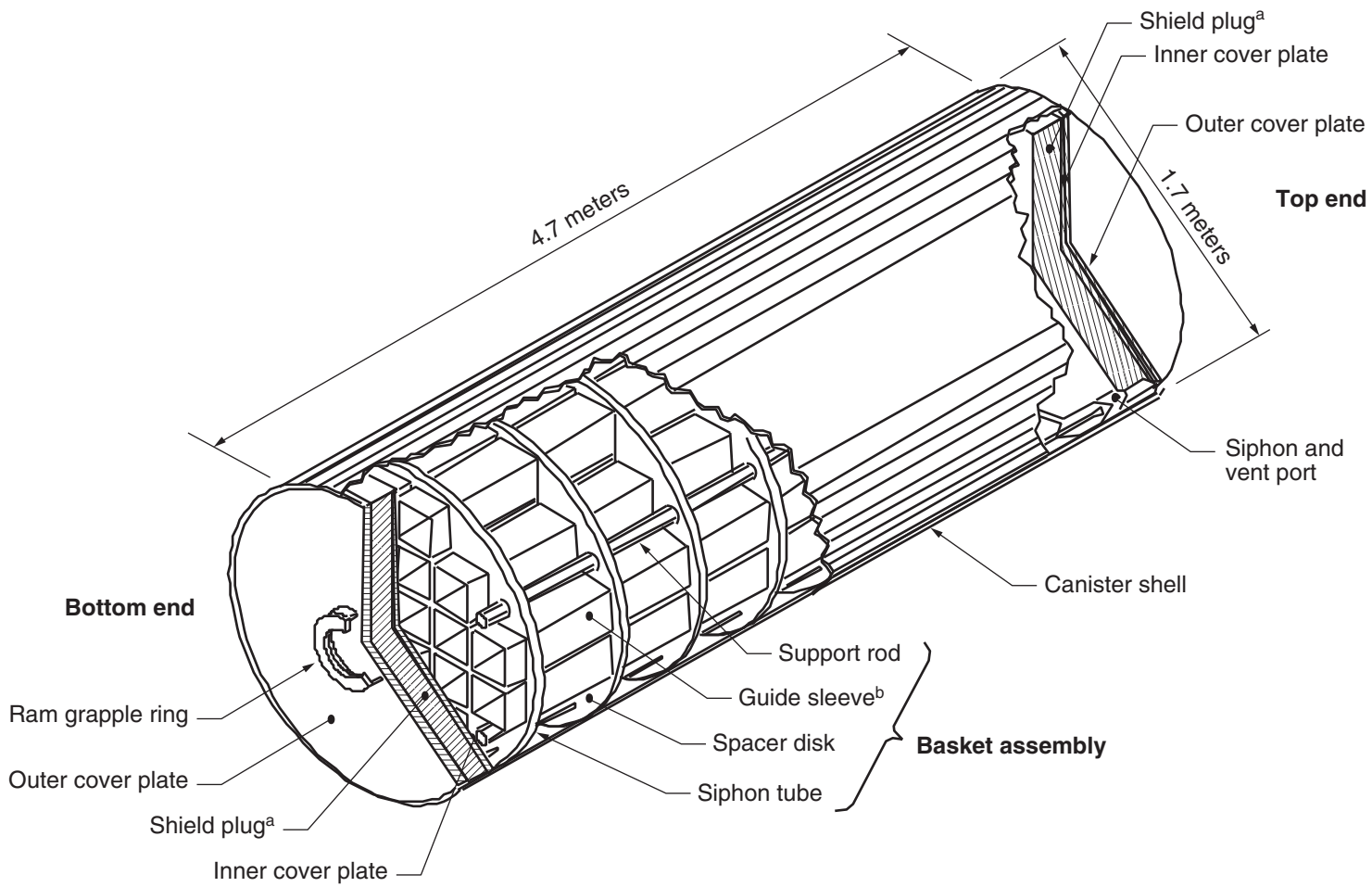

All materials 304 stainless steel except as noted.

a. Shield plug would be lead.

b. Borated neutron absorber plate for boiling-water reactor spent nuclear fuel assemblies.

To convert meters to feet, multiply by 3.2808.

Source: Modified from DIRS 101910-Poe (1998, p. 1-5).

Figure 2-34. Spent nuclear fuel dry storage canister.

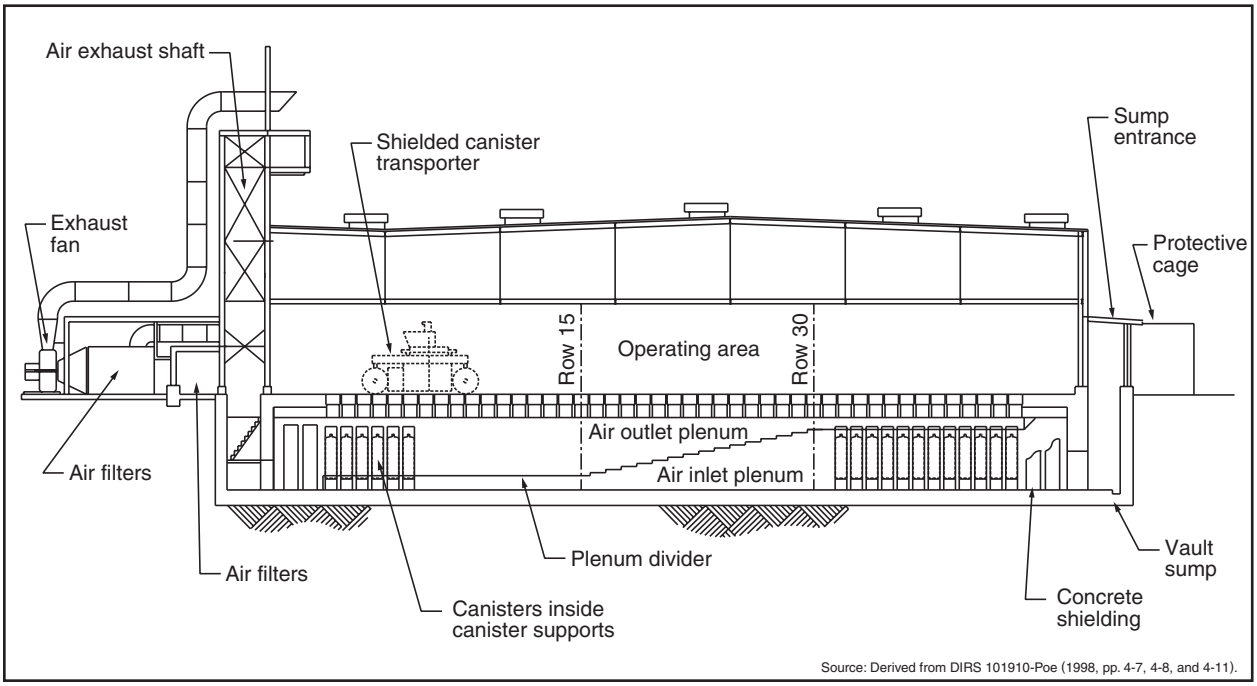

Figure 2-35. Conceptual design for solidified high-level radioactive waste storage facility.

2.2.2.2 No-Action Scenario 1

In No-Action Scenario 1, DOE would continue to manage its spent nuclear fuel and high-level radioactive waste in above- or below-grade dry storage facilities at five sites around the country. Commercial utilities would continue to manage their spent nuclear fuel at 72 sites. The commercial and DOE sites would remain under effective institutional control for at least 10,000 years. Under institutional control, these facilities would be maintained to ensure that workers and the public were protected adequately in accordance with current Federal regulations (10 CFR Parts 20 and 835) and the requirements in DOE Order 5400.5, *Radiation Protection of the Public and the Environment*. DOE based the 10,000-year analysis period on the generally applicable Environmental Protection Agency regulation for the disposal of spent nuclear fuel and high-level radioactive waste (40 CFR Part 191), even though the regulation would not apply to disposal at Yucca Mountain.

Under Scenario 1, the storage facilities would be completely replaced every 100 years. They would undergo one major repair during the first 100 years, because this scenario assumes that the design of the first storage facilities at a site would include a facility life of less than 100 years. The 100-year lifespan of future storage facilities is based on analysis of concrete degradation and failure in regions throughout the United States (DIRS 101910-Poe 1998, all). The facility replacement period of 100 years represents the assumed useful lifetime of the structures. Replacement facilities would be built on land adjacent to the existing facilities. After the spent nuclear fuel and high-level radioactive waste had been transferred to the replacement facility, the older facility would be demolished and the land prepared for the next replacement facility, thereby minimizing land-use impacts. The top portion of Figure 2-36 shows the conceptual timeline for activities at the storage facilities for Scenario 1. Only the relative periods shown on this figure, not the exact dates, are important to the analysis.

2.2.2.3 No-Action Scenario 2

In No-Action Scenario 2, spent nuclear fuel and high-level radioactive waste would remain in dry storage at commercial and DOE sites and would be under effective institutional control for approximately

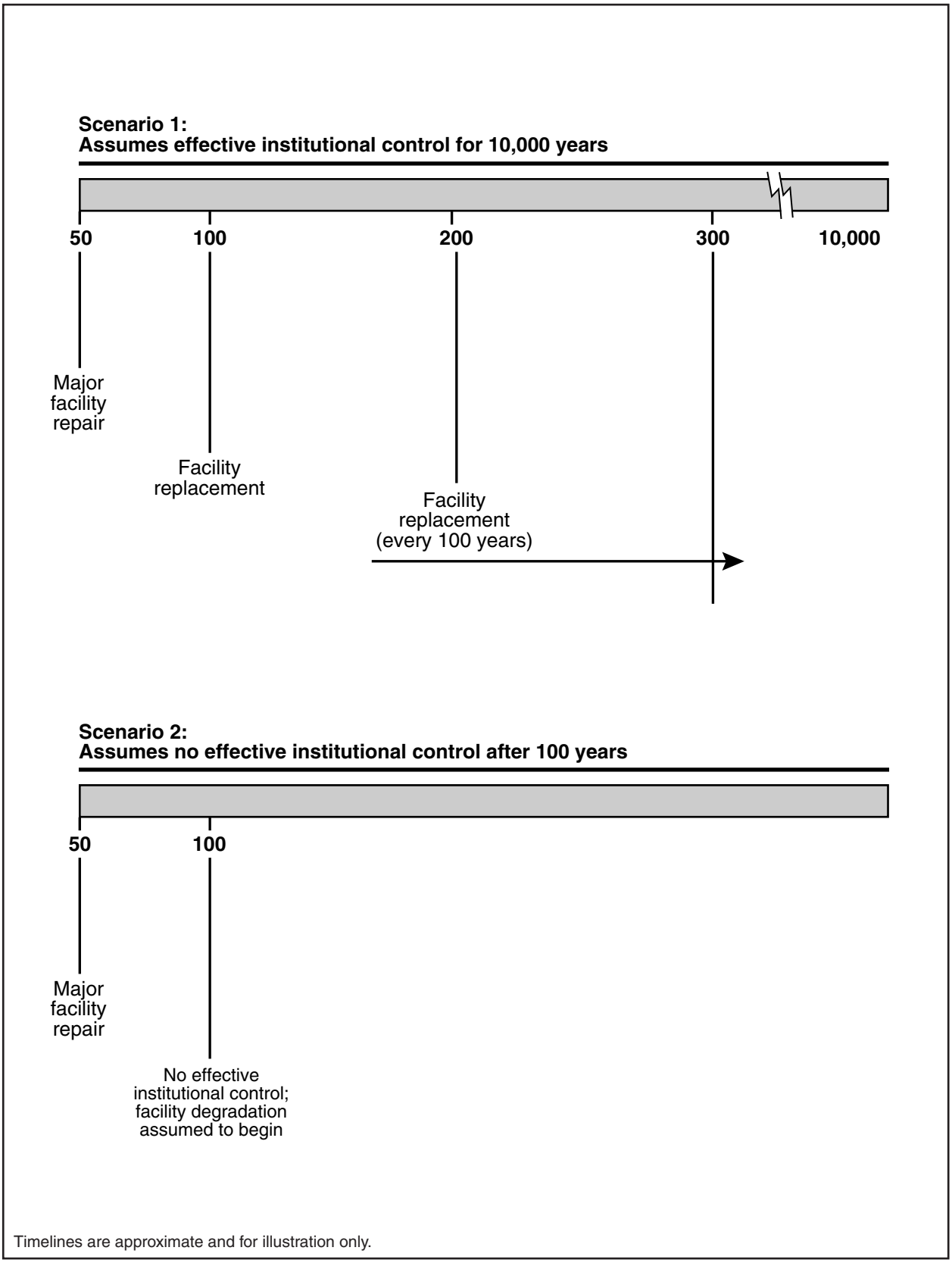

Figure 2-36. Facility timeline assumptions for No-Action Scenarios 1 and 2.

100 years (the same as Scenario 1). Beyond that time, the scenario assumes no effective institutional control. Therefore, after about 100 years and up to 10,000 years, the analysis assumed that the spent nuclear fuel and high-level radioactive waste storage facilities at 72 commercial and 5 DOE sites would begin to deteriorate and that the radioactive materials in them could eventually be released to the environment. DOE based the choice of 100 years on a review of generally applicable Environmental Protection Agency regulations for the disposal of spent nuclear fuel and high-level radioactive waste (40 CFR Part 191, Subpart B), Nuclear Regulatory Commission regulations for the disposal of low-level radioactive material (10 CFR Part 61), and a National Research Council report on standards for the proposed Yucca Mountain Repository that generally discounts the consideration of institutional control for longer periods in performance assessments for geologic repositories (DIRS 100018-National Research Council 1995, Chapter 4). The lower portion of Figure 2-36 shows the conceptual timeline for activities at the storage facilities for Scenario 2.

2.2.3 NO-ACTION ALTERNATIVE COSTS

The total estimated cost of the No-Action Alternative includes costs for the decommissioning and reclamation of the Yucca Mountain site, and for the storage of spent nuclear fuel at 72 commercial sites (63,000 MTHM), storage of DOE spent nuclear fuel (2,333 MTHM) at 4 sites (there would be no spent nuclear fuel at the West Valley Demonstration Project), and storage of solidified high-level radioactive waste (8,315 canisters) at 4 sites (there is no high-level radioactive waste at Fort St. Vrain). As listed in Table 2-6, the estimated cost (in 2001 dollars) of both Scenarios 1 and 2 for the first 100 years ranges from $55.7 billion to $61.3 billion, depending on whether the dry storage canisters had to be replaced every 100 years. The estimated costs (in 2001 dollars) for the remaining 9,900 years of Scenario 1 range from $519 million to $572 million per year. There would be no costs for Scenario 2 after the first 100 years because the scenario assumes no effective institutional control.

Table 2-6. No-Action Alternative life-cycle costs (starting in 2002) for 10,000 years (in billions of 2001 dollars).[a,b]

	First 100 years	Remaining 9,900 years (per year)	
Factor	Scenarios 1 and 2[c]	Scenario 1[c,d]	Scenario 2[e]
72 commercial sites (63,000 MTHM)	$43.6 - 49.2	$0.407 - 0.460	$0
DOE spent nuclear fuel storage sites (2,333 MTHM)	8.0	0.075	0
High-level radioactive waste storage sites (8,315 canisters)	4.1	0.038	0
Decommissioning and reclamation of the Yucca Mountain site	(f)	NA[g]	0
Totals	***$55.7 - 61.3***	***$0.519 - 0.572***	***$0***

a. Source: Adapted from DIRS 155929-Jason (1999, all).
b. Adjusted to 2001 dollars, in billions per DIRS 156899-DOE (2001, all).
c. The range of costs for commercial sites is based on the assumption that the spent nuclear fuel would either be placed in dry storage canisters that would not need to be replaced over the 10,000-year period (low cost) or would have to be placed in new dry storage canisters every 100 years (high cost).
d. Stewardship costs are expressed in average annual disbursement costs (year 2001 dollars) only.
e. Costs are not applicable.
f. The costs for decommissioning and reclamation of the Yucca Mountain site would contribute less than 0.1 percent to the total life-cycle cost of continued storage.
g. NA = not applicable.

2.3 Alternatives Considered but Eliminated from Detailed Study

This section addresses alternatives that DOE considered but eliminated from detailed study in this EIS. These include alternatives that the NWPA states this EIS need not consider (Section 2.3.1); design alternatives that DOE considered but eliminated during the evolution of the repository design analyzed in this EIS (Section 2.3.2); and alternative rail corridors and highway routes for heavy-haul trucks and

associated intermodal transfer station locations that DOE considered but eliminated during the transportation studies that identified the 10 Nevada implementing rail and intermodal alternatives analyzed in this EIS (Section 2.3.3).

2.3.1 ALTERNATIVES ADDRESSED UNDER THE NUCLEAR WASTE POLICY ACT

The NWPA states that, with respect to the requirements imposed by the National Environmental Policy Act, compliance with the procedures and requirements of the NWPA shall be deemed adequate consideration of the need for a repository, the time of the initial availability of a repository, and all alternatives to the isolation of spent nuclear fuel and high-level radioactive waste in a repository [Section 114(f)(2)]. The geologic disposal of radioactive waste has been the focus of scientific research for more than 40 years. Starting in the 1950s, the Atomic Energy Commission and the Energy Research and Development Administration (both predecessor agencies to DOE) investigated different geologic formations as potential hosts for repositories and considered different disposal concepts, including deep-seabed disposal, disposal in the polar ice sheets, and rocketing waste into the sun. After extensive discussion of the options in an EIS (DIRS 104832-DOE 1980, all), DOE decided in 1981 to pursue disposal in an underground mined geologic repository (46 *FR* 26677; May 14, 1981). A panel of the National Academy of Sciences noted in 1990 that there is a worldwide scientific consensus that deep geologic disposal, the approach being followed by the United States, is the best option for disposing of high-level radioactive waste (DIRS 100061-National Research Council 1990, all).

Chapter 1 of this EIS summarizes the process that led to the 1987 amendments to the Nuclear Waste Policy Act of 1982, in which Congress directed DOE to study only Yucca Mountain to determine if it is suitable for a repository. Consistent with this approach, the NWPA states that, for purposes of complying with the requirements of the National Environmental Policy Act, DOE need not consider alternative sites to Yucca Mountain for the repository [Section 114(f)(3)].

Under the Proposed Action, this EIS does not consider alternatives for the emplacement of more than 70,000 MTHM of spent nuclear fuel and high-level radioactive waste in a repository at Yucca Mountain because the NWPA prohibits the Nuclear Regulatory Commission from approving the emplacement in the first repository of a quantity of spent nuclear fuel containing more than 70,000 MTHM or a quantity of solidified high-level radioactive waste resulting from the reprocessing of such a quantity of spent nuclear fuel until a second repository is in operation [Section 114(d)]. However, Chapter 8 of this EIS analyzes the cumulative impacts from the disposal of all projected spent nuclear fuel and high-level radioactive waste, as well as Greater-Than-Class-C waste and Special-Performance-Assessment-Required waste in the proposed Yucca Mountain Repository.

2.3.2 REPOSITORY DESIGN ALTERNATIVES ELIMINATED FROM DETAILED STUDY

The preliminary design concept for the proposed Yucca Mountain Repository analyzed in this EIS is the result of a design process that began with early site characterization activities. The design process identified design alternatives (options) that DOE considered. Some of the design options were eliminated from further detailed study during the design evolution. Examples include placement of the emplacement drifts in the *saturated zone* (rather than the *unsaturated zone*); vertical shafts (rather than the gently sloping North and South Ramps); use of drilling and blasting methods for emplacement drift construction (rather than mechanical excavation methods such as tunnel-boring machines); and use of diesel-powered vehicles for waste package emplacement (rather than electrically powered, rail-based vehicles).

DOE recently undertook a comprehensive review and examination of possible design options to provide information for use in support of the suitability recommendation and License Application. Appendix E discusses the design options that DOE considered in this review, and Section 2.1.1.5 discusses their consideration in this EIS.

2.3.3 TRANSPORTATION ALTERNATIVES ELIMINATED FROM DETAILED STUDY

The transportation modes and scenarios analyzed in the EIS are based on DOE's assessment of what would be most feasible and practical for delivering spent nuclear fuel and high-level radioactive waste from generator sites across the continental United States to a repository at Yucca Mountain.

In response to public comments on the Draft EIS, DOE has evaluated the potential for including a large-scale barge scenario and a different mostly rail scenario in which railcars would be used to transport truck casks containing spent nuclear fuel and high-level radioactive waste. The purported advantage of large-scale use of barge transportation was that it would reduce the amount of cross-country overland travel that would be required. However, DOE eliminated the barge modal scenario from further consideration in the EIS because it would be overly complex, requiring greater logistical complexity than either rail or legal-weight truck transportation; a much greater number of large rail casks than rail transport; much greater cost than either rail or legal-weight truck transportation; long transport distances potentially requiring the transit of the Panama Canal outside U.S. territorial waters; transport on intercoastal and coastal waterways of coastal states and on major rivers through and bordering states; extended transportation times; intermodal transfer operations at ports; and land transport from a western port to Yucca Mountain.

DOE also eliminated the truck-cask-on-railcar modal scenarios from future consideration. In this scenario, legal-weight truck casks would be shipped by rail from generator sites to Nevada and then by legal-weight trucks in the State to a Yucca Mountain repository. The purported advantage of this scenario is that DOE could use rail transportation nationally and would not have to construct and operate a branch rail line or upgrade highways, construct an intermodal transfer station, and use heavy-haul trucks in Nevada. DOE determined that while this scenario would be feasible, it would not be practical. The number of shipping casks and railcar shipments would be greater by a factor of 5 than for the mostly rail scenario and the additional cost to the Program would be more than $1 billion. In addition, the truck-casks-on-railcars scenario would lead to the highest estimates of occupational health and public health and safety impacts, most coming from rail-traffic related facilities.

For these reasons, DOE selected the mostly rail and mostly legal-weight truck transportation scenarios as the basis to estimate impacts of transporting spent nuclear fuel to a Yucca Mountain repository. It also evaluated use of barge transportation as a component of the mostly rail scenario for transporting rail casks to nearby railheads from generator sites that could load a rail cask and that are located near navigable waterways but are not served by railroads.

2.3.3.1 Potential Rail Routes Considered but Eliminated from Further Detailed Study

Because rail access is not currently available to the Yucca Mountain site, DOE would have to build a branch rail line from an existing mainline railroad to the repository or transfer rail shipping casks to heavy-haul trucks at an intermodal transfer station to make effective use of rail transportation for shipping spent nuclear fuel and high-level radioactive waste to the repository. Section 2.1.3 describes the 10 implementing rail and intermodal alternatives for Nevada transportation that this EIS evaluates. DOE selected these implementing alternatives based on transportation studies that identified, evaluated, and eliminated other potential Nevada transportation rail and intermodal alternatives (DIRS 104792-YMP 1990, all; DIRS 104795-CRWMS M&O 1995, all; DIRS 101214-CRWMS M&O 1996, all). This section identifies the potential rail and highway routes for heavy-haul trucks and associated intermodal transfer station locations that DOE considered but eliminated from further detailed study.

In the *Preliminary Rail Access Study* (DIRS 104792-YMP 1990, all), DOE identified 10 potential branch rail line routes to the Yucca Mountain site (Valley, Arden, Jean, Crucero, Ludlow, Mina, Caliente, Carlin, Cherry Creek, and Dike). Figure 2-37 shows these potential rail routes, each named for the area where it would connect to the mainline railroad. Alternatives within each route were developed wherever

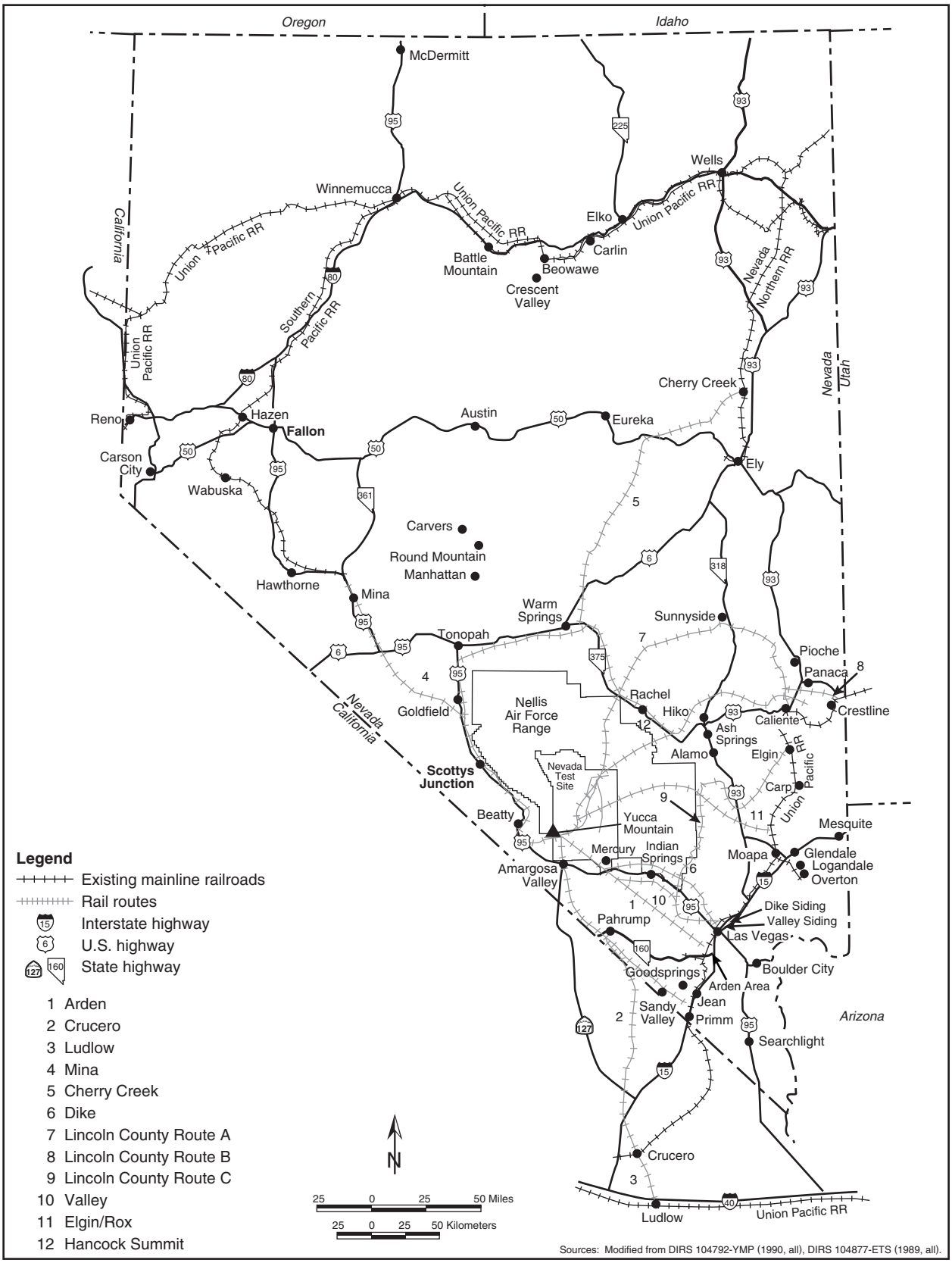

Figure 2-37. Potential rail routes to Yucca Mountain, Nevada, considered but eliminated from further study.

possible. The routes were chosen to maximize the use of Federal lands, provide access to regional rail carriers, avoid obvious land-use conflicts, and meet current railroad engineering practices. After the development of these rail routes, Lincoln County and the City of Caliente identified three additional routes (identified as Lincoln County Routes A, B, and C).

DOE evaluated these 13 potential rail routes in DIRS 104792-YMP (1990, all) and reevaluated them in the *Nevada Potential Repository Preliminary Transportation Strategy, Study 1* (DIRS 104795-CRWMS M&O 1995, all). One new route, Valley Modified, was added in the 1995 study based on updated information from the Bureau of Land Management on the status of two Wilderness Study Areas that represent possible land-use conflicts for the Valley route in the original evaluation. Three additional alignments—Caliente-Chalk Mountain, Elgin/Rox, and Hancock Summit—were evaluated in the Nevada Potential Repository Preliminary Assessment of the Caliente-Chalk Mountain Rail Corridor. The evaluations reviewed each potential rail corridor to identify land-use compatibility issues (the presence or absence of land-use conflicts, and the potential for mitigation of a conflict if one exists) and for access to regional rail carriers. The evaluations also compared other factors of the routes, including favorable topography (gently sloping rather than rugged terrain) and avoidance of lands withdrawn from public use by Federal action. Based on these evaluations, DOE eliminated the Valley, Arden, Crucero, Ludlow, Mina, Cherry Creek, Dike, Elgin/Rox, Hancock Summit, and Lincoln County A, B, and C rail routes from further study.

2.3.3.2 Potential Highway Routes for Heavy-Haul Trucks and Associated Intermodal Transfer Station Locations Considered but Eliminated from Further Detailed Study

DOE identified and evaluated potential highway routes for heavy-haul trucks from existing mainline railroads to the Yucca Mountain site (DIRS 104795-CRWMS M&O 1995, all; DIRS 101214-CRWMS M&O 1996, all; DIRS 154448-CRWMS M&O 1998, all). The Department identified highway routes for heavy-haul trucks and associated intermodal transfer station locations to provide reasonable access to existing mainline railroads, to minimize transport length from an existing mainline rail interchange point, and to maximize the use of roads identified by the Nevada Department of Transportation for the highest allowable axle load limits. In addition to the five implementing intermodal alternatives selected for analysis in this EIS (see Section 2.1.3.3), Figure 2-38 shows highway routes for heavy-haul trucks and associated intermodal transfer station locations that DOE considered but eliminated from further detailed study. The eliminated alternatives include four routes named for the location of the intermodal transfer station—Apex, Arden, Baker, and Apex/Dry Lake (Las Vegas Bypass)—and three that are representative of routes from the northern Union Pacific mainline railroad (Northern Routes 1, 2, and 3).

DOE considered the development of new roads for dedicated heavy-haul truck shipments. The analysis assumed those routes would be within the corridors identified for potential rail routes, because the selection criteria for heavy-haul routes and rail routes (land-use compatibility issues, access to regional rail carriers, etc.) would be similar (DIRS 101214-CRWMS M&O 1996, p. 6-3). DOE also considered routes for heavy-haul trucks in the potential rail corridors that could use portions of the existing road system for part of the route length. DOE eliminated the development of a new road for heavy-haul trucks from further detailed evaluation, because the construction of a new branch rail line would be only slightly more expensive and because transportation by rail would not require intermodal transfers and would be more efficient (DIRS 101214-CRWMS M&O 1996, p. 6-7).

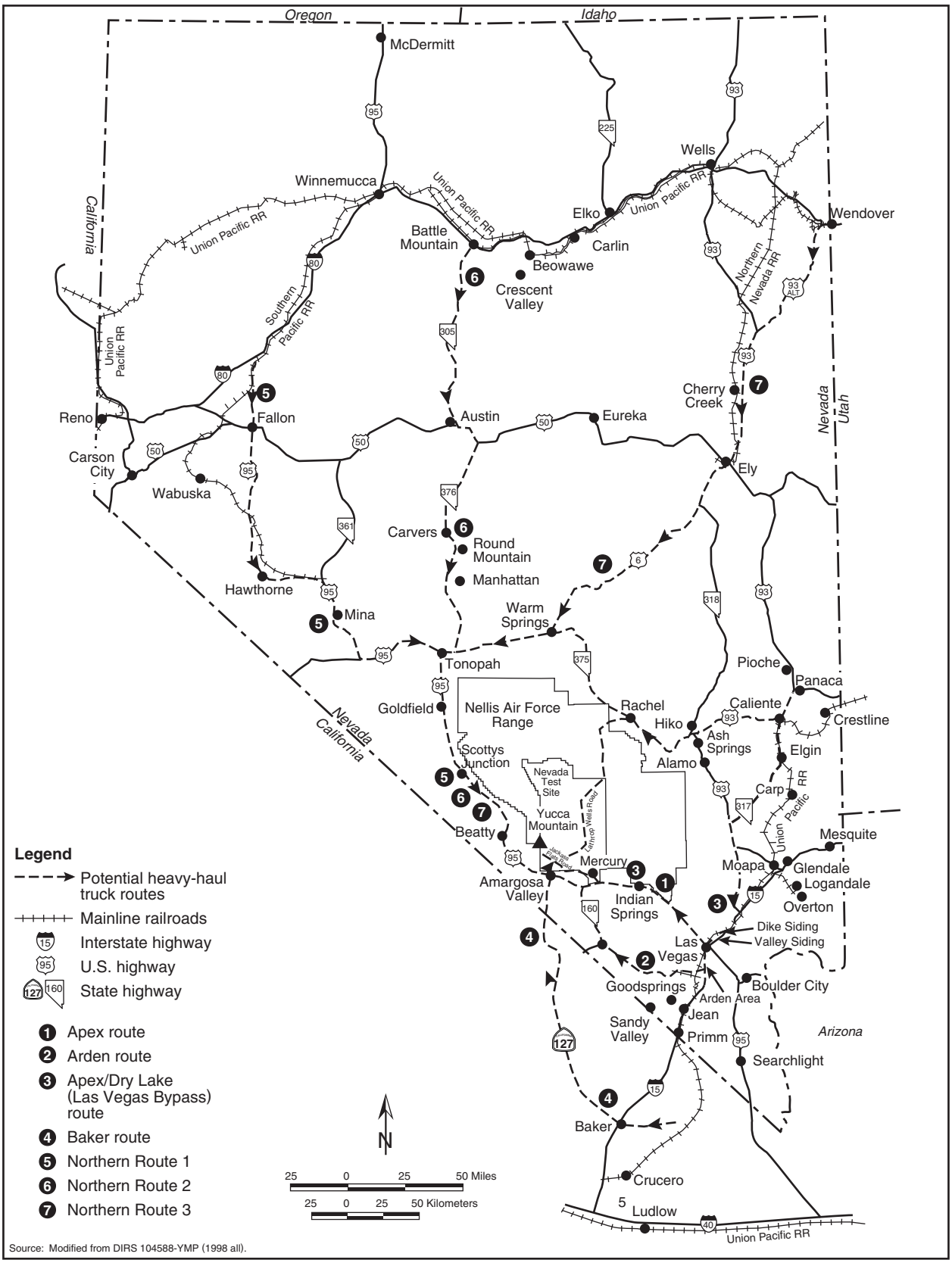

Figure 2-38. Potential highway routes for heavy-haul trucks to Yucca Mountain, Nevada, considered but eliminated from further study.

2.4 Summary of Findings and Comparison of the Proposed Action and the No-Action Alternative

This section summarizes and compares the potential environmental impacts of the Proposed Action and the No-Action Alternative (Section 2.2). Detailed descriptions of the impact analyses are contained in the following chapters:

- Chapter 4 describes the short-term environmental impacts associated with construction, operation and monitoring, and closure of the repository and includes the manufacture of waste disposal containers and shipping casks.
- Chapter 5 describes long-term (postclosure) environmental impacts from the disposal of spent nuclear fuel and high-level radioactive waste in the repository.
- Chapter 6 describes the impacts associated with the transportation of spent nuclear fuel, high-level radioactive waste, other materials, and personnel to and from the repository.
- Chapter 7 describes the short-term and long-term impacts associated with the No-Action Alternative.

This EIS defines *short-term impacts* as those that would occur until and during the closure of the repository and *long-term impacts* as those that would occur after repository closure and for as long as 10,000 years.

This section summarizes the findings of the EIS analyses and contains:

- A general comparison of the impacts of the Proposed Action and No-Action Alternative (Section 2.4.1), with an overall summary of the health impacts
- Short-term impacts of repository construction, operation and monitoring, and closure, including impacts for the operating modes analyzed and short-term impacts of the No-Action Alternative (Section 2.4.2)
- Long-term impacts of the Proposed Action and No-Action Alternative (Section 2.4.3)
- Impacts associated with the transportation scenarios and implementing alternatives (Section 2.4.4)

2.4.1 COMPARISON OF PROPOSED ACTION AND NO-ACTION ALTERNATIVE

In general, the EIS analyses showed that the environmental impacts associated with the Proposed Action would be small to moderate, as described in Chapters 4, 5, 6, and 8. For some of the resource areas specifically analyzed in this study, there would be no impacts. Table 2-7 provides an overview approach to comparing the range of impacts for the Proposed Action (divided into repository, combined national and Nevada transportation, and long-term impacts) and the No-Action Alternative (divided into short-term and the two No-Action long-term scenarios). The sections of the EIS where the reader may find more information about the impacts are noted.

Although generally small, environmental impacts would occur under the Proposed Action. DOE would reduce or eliminate many such impacts with mitigation measures (see Chapter 9) or implementation of standard Best Management Practices (see Chapter 9). Under the No-Action Alternative, the short-term impacts would be the same under Scenario 1 or 2. Under Scenario 1, DOE would continue to manage spent nuclear fuel and high-level radioactive waste facilities at 5 DOE sites, and commercial utilities would continue to manage their spent nuclear fuel at 72 sites on a long-term basis and to isolate the

Table 2-7. Impacts associated with the Proposed Action and No-Action Alternative[a] (page 1 of 4).

Resource area	Flexible design potential operating modes–range of impacts			No-Action Alternative		
	Short-term (through closure)		Long-term (after closure, to 10,000 years)	Short-term (100 years)	Long-term (100 to 10,000 years)	
	Repository	Transportation			Scenario 1	Scenario 2
Land use and ownership	Small; the flexible design range of disturbed land is from 4.3 km^2[b] to about 6.0 km^2 of the 600 km^2 that comprise the analyzed withdrawal area See Section 4.1.1.2	Small to moderate; 0 to about 20 km^2 of land disturbed for new transportation routes; Air Force identified Nellis Air Force Range conflicts for some routes; some routes pass close to or through Wilderness Study Areas; some corridors could directly impact Native Americans and Indian reservations; and one corridor could conflict with the Ivanpah Airport construction and operation See Section 2.4.4 and Chapter 6	Small; potential for limited access into the area; the only surface features remaining would be markers See Section 5.0	Small; storage would continue at existing sites See Section 7.2.1.1	Small; storage would continue at existing sites See Section 7.2.1.1	Large; potential contamination of 0.04 to 0.4 km^2 surrounding each of the 72 commercial and 5 DOE sites See Section 7.2.2.1
Air quality	Small; releases and exposures well below regulatory limits (less than 6 percent of limits) See Section 4.1.2.5	Small; releases and exposures below regulatory limits; pollutants from vehicle traffic and trains would be small in comparison to other national vehicle and train traffic; Clean Air Act General Conformity Requirements might apply in Clark County Nevada See Section 2.4.4, Tables 2-10 and 2-11, and Chapter 6	Very small, 5.3×10^{-10} latent cancer fatalities peak effect See Section 5.5.2	Small; releases and exposures well below regulatory limits See Section 7.2.1.2	Small; releases and exposures well below regulatory limits See Section 7.2.1.2	Small; degraded facilities would preclude large atmospheric releases See Section 7.2.2.2
Hydrology (groundwater and surface water)	Groundwater–small; water demand (230 to 290 acre-feet[c] per year) well below lowest estimate of the groundwater basin's perennial yield (580 acre-feet) See Section 4.1.3.3	Small; withdrawal of up to 710 acre-feet from multiple wells and hydrographic areas over about 4 years See Section 2.4.4 and Chapter 6	Small amounts of contamination of groundwater in Amargosa Valley during the first 10,000 years. Contamination is several hundred thousand times less than the groundwater protection standard in 40 CFR 197 See Section 5.4.2.1	Small; usage would be small in comparison to other site use See Section 7.2.1.3.2	Small; usage would be small in comparison to other site use See Section 7.2.1.3.2	Large; potential for radiological contamination of groundwater around 72 commercial and 5 DOE sites See Section 7.2.2.3.2
	Surface water–small; new land disturbance of 2.8 to 4.5 square kilometers would result in minor changes to runoff and infiltration rates; floodplain assessment concluded impacts would be small See Section 4.1.3.2	Small; minor changes to runoff and infiltration rates; all rail corridors pass through areas of identified 100-year flood zones, additional floodplain assessments would be performed in the future as necessary See Section 2.4.4 and Chapter 6	Small; minor changes to runoff and infiltration rates See Section 5.0	Small; minor changes to runoff and infiltration rates See Section 7.2.1.3.1	Small; minor changes to runoff and infiltration rates See Section 7.2.1.3.1	Large; potential for radiological releases and contamination of drainage basins downstream of 72 commercial and 5 DOE sites (concentrations potentially exceeding current regulatory limits) See Section 7.2.2.3.1

Table 2-7. Impacts associated with the Proposed Action and No-Action Alternative[a] (page 2 of 4).

Resource area	Flexible design potential operating modes–range of impacts			No-Action Alternative		
	Short-term (through closure)		Long-term (after closure, to 10,000 years)	Short-term (100 years)	Long-term (100 to 10,000 years)	
	Repository	Transportation			Scenario 1	Scenario 2
Biological resources and soils	Small to moderate; loss of about 4.3 km^2 to 6.0 km^2 of desert soil, habitat, and vegetation; adverse impacts to individual threatened desert tortoises (not the species as a whole); reasonable and prudent measures to minimize impacts; impacts to other plants and animals and habitat small; wetlands assessment concluded impacts would be small See Section 4.1.4	Small to moderate; loss of 0 to 20 km^2 of desert soil, habitat, and vegetation for heavy-haul routes and rail corridors; adverse impacts to individual threatened desert tortoises (not the species as a whole); reasonable and prudent measures to minimize impacts; impacts to other plants and animals and habitat small; additional wetlands assessments would be performed in the future as necessary prior to any construction See Section 2.4.4 and Chapter 6	Small; slight increase in temperature of surface soil directly over the repository for 10,000 years resulting in a potential temporary shift in plant and animal communities in this small area (about 8 km^2) See Section 5.0	Small; storage would continue at existing sites See Section 7.2.1.4	Small; storage would continue at existing sites See Section 7.2.1.4	Large; potential adverse impacts at each of the 77 sites from subsurface contamination of 0.04 to 0.4 km^2 See Section 7.2.2.4
Cultural resources	Small to moderate; repository development would disturb up to about 4.5 km^2 of previously undisturbed land; mitigation measures would avoid or minimize damage to and illicit collecting at archaeological sites; programs in place to minimize impacts; opposing Native American viewpoint See Section 4.1.5.2	Small to moderate; loss of 0 to 20 km^2 of land disturbed for new transportation routes; mitigation measures would avoid or minimize damage to and illicit collecting at archaeological sites; programs in place to minimize impacts; opposing Native American viewpoint See Section 2.4.4 and Chapter 6	Small; potential for limited access into the area; opposing Native American viewpoint See Section 5.0	Small; storage would continue at existing sites; limited potential of disturbing sites See Section 7.2.1.5	Small; storage would continue at existing sites; limited potential of disturbing sites See Section 7.2.1.5	Small; no construction or operation activities; no impacts See Section 7.2.2
Socioeconomics	Small; estimated peak total employment of 3,400 occurring in 2006 would result in less than a 1 percent increase in composite regional employment; therefore, impacts would be small. Estimated peak direct employment for the repository during construction would be approximately 1,900 in 2006. See Sections 4.1.6.2.1 and 4.1.6.3	Small; employment increases would range from less than 1 percent to 4.9 percent (use of intermodal transfer station in Lincoln County) of employment in affected counties See Section 2.4.4 and Chapter 6	Small; no workers, no impact See Section 5.0	Small; population and employment changes would be small compared to totals in the regions See Section 7.2.1.6	Small; population and employment changes would be small compared to totals in the regions See Section 7.2.1.6	Small; no workers; no impacts See Section 7.2.2
Occupational and public health and safety						
Public						
Radiological[d]						
MEI (probability of an LCF)	1.6×10^{-5} to 3.1×10^{-5} See Section 4.1.7.5.3	1.4×10^{-4} to 1.2×10^{-3} See Sections 6.1.1 and 6.2.3.2	4×10^{-10} to 4×10^{-9} at the boundary of the controlled area (approximately 18 km south of the repository) See Sections 5.4.2.1 and 5.4.2.2	4.3×10^{-6} See Section 7.2.1.7.3	1.3×10^{-6} See Section 7.2.1.7.3	(e)
Population (LCFs)	0.46 to 2.0 See Section 4.1.7.5.2	0.61 to 2.5 See Section 6.1.1	2×10^{-6} to 3×10^{-4} See Sections 5.4.2.1 and 5.4.2.2	0.41 See Section 7.2.1.7.3	3 See Section 7.2.1.7.3	3,300[f] See Section 7.2.2.5.3

Table 2-7. Impacts associated with the Proposed Action and No-Action Alternative[a] (page 3 of 4).

Resource area	Flexible design potential operating modes–range of impacts: Short-term (through closure): Repository	Flexible design potential operating modes–range of impacts: Short-term (through closure): Transportation	Flexible design potential operating modes–range of impacts: Long-term (after closure, to 10,000 years)	No-Action Alternative: Short-term (100 years)	No-Action Alternative: Long-term (100 to 10,000 years): Scenario 1	No-Action Alternative: Long-term (100 to 10,000 years): Scenario 2
Occupational and public health and safety (continued)						
Nonradiological (fatalities due to emissions)	Small; exposures well below regulatory limits See Section 4.1.7	1.6 to 2.8[g] See Sections 6.1.1, 6.1.3, 6.3.2.2.5.6, and 6.3.3.2.1.5	Small; exposures well below regulatory limits or guidelines See Section 5.0	Small; exposures well below regulatory limits or guidelines See Section 7.2.1.7.1	Small; exposures well below regulatory limits or guidelines See Section 7.2.1.7.1	Moderate to large; substantial increases in releases of hazardous substances in the spent nuclear fuel and high-level radioactive waste and exposures to the public See Section 7.2.2
Workers (involved and noninvolved)						
Radiological (LCFs)	4.0 to 6.8 See Section 4.1.7.5.2	3.2 to 11.7 See Section 6.1.1	No workers, no impacts See Section 5.0	16 See Section 7.2.1.7.3	10 See Section 7.2.1.7.3	No workers, no impacts See Section 7.2.2
Nonradiological fatalities (includes commuting traffic fatalities)	2.0 to 3.3 See Section 4.1.7.5.1	12 to 23[h] See Sections 6.1.1, 6.1.3, 6.3.2.2.5.6, and 6.3.3.2.1.5	No workers, no impacts See Section 5.0	9 See Section 7.2.1.7.2 and 7.2.1.14	1,080 See Section 7.2.1.7.2 and 7.2.1.14	No workers, no impacts See Section 7.2.2
Accidents						
Public						
Radiological						
MEI (probability of an LCF)	2.9×10^{-13} to 1.9×10^{-5} See Section 4.1.8.1	0.0015 to 0.015 See Section 6.1.1	Not applicable See Section 5.0	No impacts See Section 7.2.1.8	No impacts See Section 7.2.1.8	Not applicable See Section 7.2.2.7
Population (LCFs)	1.4×10^{-11} to 1.1×10^{-2} See Section 4.1.8.1	0.55 to 5 See Section 6.1.1	Not applicable See Section 5.0	No impacts See Section 7.2.1.8	No impacts See Section 7.2.1.8	3 to 13 See Section 7.2.2.7
Workers	Large; for some unlikely accident scenarios workers would likely be severely injured or killed See Section 4.1.8.1	Large; for some unlikely accident scenarios workers would likely be severely injured or killed See Section 2.4.4 and Chapter 6	No workers, no impacts See Section 5.0	Large; for some unlikely accident scenarios workers would likely be severely injured or killed See Section 7.2.1.8	Large; for some unlikely accident scenarios workers would likely be severely injured or killed See Section 7.2.1.8	Small; no workers; no impacts See Section 7.2.2
Noise/Ground Vibration	Small; impacts to public would be low due to large distances to residences; workers exposed to elevated noise levels – controls and protection used as necessary See Section 4.1.9.2	Small to moderate; transient and not excessive, less noise than 90 dBA[i]; ground vibration infrequent and less than 88 dBV at 25 m See Section 2.4.4 and Chapter 6	Small; no activities, therefore, no noise or ground vibration See Section 5.0	Small; transient and not excessive, less than 90 dBA See Section 7.2.1.9	Small; transient and not excessive, less than 90 dBA See Section 7.2.1.9	Small; no activities, therefore, no noise See Section 7.2.2

Table 2-7. Impacts associated with the Proposed Action and No-Action Alternative[a] (page 4 of 4).

Resource area	Flexible design potential operating modes – range of impacts			No-Action Alternative		
	Short-term (through closure)		Long-term (after closure, to 10,000 years)	Short-term	Long-term (100 to 10,000 years)	
	Repository	Transportation		(100 years)	Scenario 1	Scenario 2
Aesthetics	Small; low adverse impacts to aesthetic or visual resources in the area. There may be increase in lighting impacts due to lighting associated with the ventilation system See Section 4.1.10	Small; possible temporary and transient; conflict with visual resource management goals for Wilson Pass Option of the Jean rail corridor; and discernible impacts from the Caliente Intermodal transfer facility near Kershaw-Ryan State Park. See Section 2.4.4 and Section 6.2	Small; only surface features remaining would be markers See Section 5.0	Small; storage would continue at existing sites; expansion as needed See Section 7.2.1.10	Small; storage would continue at existing sites; expansion as needed See Section 7.2.1.10	Small; aesthetic value decreases as facilities degrade See Section 7.2.2
Utilities, energy, materials, and site services	Small; use of materials would be very small in comparison to amounts used in the region; electric power delivery system to the Yucca Mountain site would have to be enhanced See Section 4.1.11.2	Small; use of materials and energy would be small in comparison to amounts used nationally See Section 2.4.4 and Chapter 6	Small; no use of materials or energy See Section 5.0	Small; materials and energy use would be small compared to total site use See Section 7.2.1.11	Small; materials and energy use would be small compared to total site use See Section 7.2.1.11	Small; no use of materials or energy See Section 7.2.2
Management of site-generated waste and hazardous materials	Small; radioactive and hazardous waste generated would be a few percent of existing offsite capacity; other wastes would be managed onsite See Section 4.1.12.2	Small; waste generated would be a fraction of existing offsite capacity See Section 2.4.4 and Chapter 6	Small; no waste generated or hazardous materials used See Section 5.0	Small; waste generated and materials used would be small compared to total site generation and use See Section 7.2.1.12	Small; waste generated and materials used would be small compared to total site generation and use See Section 7.2.1.12	Small; no waste generated or hazardous materials used See Section 7.2.2
Environmental justice	Small; no disproportionately high and adverse impacts to minority or low-income populations; opposing Native American viewpoint See Section 4.1.13	Small; no disproportionately high and adverse impacts to minority or low-income populations; opposing Native American viewpoint See Section 6.1.2.12	Small; no disproportionately high and adverse impacts to minority or low-income populations; opposing Native American viewpoint See Section 5.0	Small; no disproportionately high and adverse impacts to minority or low-income populations See Section 7.2.1.13	Small; no disproportionately high and adverse impacts to minority or low-income populations See Section 7.2.1.13	Large; potential for disproportionately high and adverse impacts to minority or low-income populations See Section 7.2.2.8

a. Ranges might differ from simple addition of the minimum and maximum values listed for the constituent phases because these values might not correspond between different phases. For example, a scenario that maximizes impacts during construction could result in minimal impacts during operations.

b. km^2 = square kilometers; to convert to acres, multiply by 247.1.

c. To convert acre-feet to cubic meters, multiply by 1233.49.

d. LCF = latent cancer fatality; MEI = maximally exposed individual.

e. With no effective institutional controls, the maximally exposed individual could receive a fatal dose of radiation within a few weeks to months. Death would be caused by acute direct radiation exposure.

f. Downstream exposed population of approximately 3.9 billion over 10,000 years.

g. Nonradiological fatalities due to exhaust emissions health effects from spent nuclear fuel and high-level radioactive waste transportation, including loadout; exhaust emissions health effects from commuter and materials transportation for repository construction, operation, and closure; and rail line or heavy-haul truck/intermodal transfer station construction, maintenance, and operation.

h. Nonradiological traffic fatalities from spent nuclear fuel and high-level radioactive waste transportation and commuter traffic fatalities. As many as 10 to 17 of these fatalities could be members of the public.

i. dBA = *A-weighted decibels*, a common sound measurement. A-weighting accounts for the fact that the human ear responds more effectively to some pitches than to others. Higher pitches receive less weighting than lower ones.

material from human access with institutional control. Under Scenario 2, with the assumption of no effective institutional control after 100 years, the spent nuclear fuel and high-level radioactive waste storage facilities would begin to deteriorate and radioactive materials could escape to the environment, contaminating the local atmosphere, soils, surface water, and groundwater, thereby representing a considerable human health risk. As described in Chapter 7, if DOE increased the assumed institutional control period to be consistent with the repository preclosure period (100 to 324 years), the short-term impacts would range up to three times those reported for the No-Action Alternative, depending on the environmental resource area evaluated.

The range of potential health impacts for the Proposed Action, depending on the operating mode, and for the No-Action Alternative are shown in Table 2-8. The transportation-related impacts presented in Table 2-8 represent those associated with the preferred transportation mode (mostly rail). The range of health impacts to workers and the public for repository construction, operation and monitoring, and closure including the full range of possible transportation scenarios and modes would be 24 to 49 fatalities (see Table 2-7), whereas the health impacts for repository construction, operation and monitoring, and closure using the preferred mode of transportation (mostly rail) would be 24 to 38 fatalities (see Table 2-8).

2.4.2 SHORT-TERM IMPACTS OF THE PROPOSED ACTION REPOSITORY CONSTRUCTION, OPERATION AND MONITORING, AND CLOSURE AND NO-ACTION ALTERNATIVE

DOE analyzed short-term impacts (project start to the end of closure) for the Proposed Action and No-Action Alternative in various resource areas. The information presented in Table 2-7 shows that the short-term environmental impacts for the Proposed Action and the No-Action Alternative would generally be small and do not differentiate dramatically between the two alternatives. The analyses also included cost estimates for the two alternatives. Estimated short-term (to the end of closure) costs (in 2001 dollars) for the Proposed Action would range from $43 to $58 billion, and those for the No-Action Alternative would be as much as $61 billion for the same period (see Sections 2.1.5 and 2.2.3).

To construct the analytical basis for evaluation of repository impacts, DOE used widely accepted analytical tools to estimate potential environmental impacts, coupled with the best available information, and cautious but reasonable assumptions where uncertainties exist. This included applying conservative assumptions to the set of reasonable operating scenarios identified in the Science and Engineering Report (DIRS 153849-DOE 2001, p. 2-24) to ensure that the EIS did not underestimate potential environmental impacts and to accommodate the greatest range of potential future actions.

DOE has established parameters for the range of potential repository operating modes and has identified these parameters and their ranges in Table 2-2. These operating modes provide the basis for evaluation of the environmental impacts described in Chapter 4. Ensuring that the range of potential impacts evaluated fully encompasses the impacts that could occur under any reasonable repository mode of operation requires a basic understanding of how the particular impacts relate to the various parameters, particularly those parameters that could be varied to achieve lower-temperature operation.

As shown in the Draft EIS and the Supplement to the Draft EIS, the short-term impacts (preclosure) would increase with the size of the repository and surface facilities. The smallest repository and surface facilities are associated with the higher-temperature repository operating mode and therefore would result in the lowest short-term environmental impacts. As detailed in Section 2.1.1.2.2, the lower-temperature repository operating mode would be achieved by varying several of the design parameters independently or in combination, for differing effects. Design parameters include waste package loading, repository ventilation duration, and waste package spacing. In the analyses, DOE maximized each of these parameters in turn, and assumed reasonably conservative values for the other dependent parameters to

Table 2-8. Health and safety impact comparison of Proposed Action to No-Action Alternative.[a]

Proposed Action impacts (0 to 10,000 years) Impacts for the preclosure period (up to 341 years)		No-Action impacts (0 to 10,000 years) Impacts from 0 to 100 years	
Radiological		Radiological	
Loadout and transportation of SNF and HLW	4 LCFs	Loadout and transportation of SNF and HLW	0 LCFs
Construction and operations at repository	4 - 8 LCFs	Construction and operations	16 LCFs
Subtotal	8 - 12 LCFs	Subtotal	16 LCFs
Nonradiological		Nonradiological	
Transportation via mostly rail		Transportation (materials and commuting)	7 fatalities
SNF and HLW to Yucca Mountain	3 - 4 fatalities	Construction and operations	2 fatalities
Nevada railroad construction and maintenance	1 - 2 fatalities	Subtotal	9 fatalities
Repository construction, operation and monitoring, and closure	10 - 17 fatalities		
Construction and operations at repository	2 - 3		
Subtotal	16 - 26 fatalities		
Total (preclosure period)	***24 - 38 fatalities or LCFs***	***Total (0 to 100 years)***	***25 fatalities or LCFs***
		Impacts from 100 to 10,000 years	
Impacts from closure to 10,000 years		With institutional control	No institutional control
Radiological	~0 LCF	~13 LCFs	~3,300 LCFs
Transportation	0 fatalities	~760 fatalities	0 fatalities
Construction and operations	0 fatalities	~320 fatalities	0 fatalities
Total (0 to 10,000 years)	***24 - 38 fatalities or LCFs***	***~1,120 fatalities or LCFs***	***~3,325 fatalities or LCFs***

a. Abbreviations: SNF = spent nuclear fuel; HLW = high-level radioactive waste; LCF = latent cancer fatality.

evaluate the full range of potential environmental impacts. As an example, DOE considered a repository with the largest waste package spacing (6.4 meters), with and without the use of surface aging. The result was the largest repository and surface facilities and therefore the highest potential impacts for some environmental resource areas (for example, land disturbance, nonradiological air quality, and water use). Conversely, when DOE assumed the long postemplacement ventilation period (300 years), with and without the surface aging facility, the result was a repository that would be open for a longer period with higher potential for impacts to workers and release of naturally occurring radon from the open repository to the offsite public. DOE evaluated the reasonable combinations of these variable design parameters to establish the range of impacts reported in Chapter 4 and summarized in Table 2-7.

For the No-Action Alternative, short-term actions would be limited to termination of activities and reclamation at the Yucca Mountain site, as well as continued management and storage of spent nuclear fuel and high-level radioactive waste at 72 commercial and 5 DOE sites across the United States. Short-term actions at the repository would include dismantling and removal of surface structures, rehabilitating land disturbed during characterization activities, salvage of usable equipment and materials, sealing of boreholes, and grating of portals. Because the activities (for example, earth moving, facility removal, and site reclamation) would be essentially the reverse of facility construction and reclamation of the site is expected to require 1 year, DOE estimated the resultant impacts as essentially equal to 1 year of repository construction activities (see Chapter 7, Section 7.1, for more details).

For the 77 generator sites, impacts resulting from continued management and storage of spent nuclear fuel and high-level radioactive waste were estimated based on actual operational experience at DOE and commercial storage facilities. In addition, the short-term impacts for the No-Action Scenarios 1 and 2 would be essentially the same because both scenarios assume institutional controls remain in place for the first 100 years. The information in Table 2-7 generally reflects environmental impacts at the generator sites, because the short-term impacts of No-Action at the repository would be much smaller than the collective impacts at the 77 generator sites.

2.4.3 LONG-TERM IMPACTS OF THE PROPOSED ACTION AND THE NO-ACTION ALTERNATIVE

In addition to the short-term impacts described above, DOE assessed the impacts from radiological and nonradiological hazardous materials released over a much longer period (100 years to as long as 10,000 years) after the closure of the repository (for the Proposed Action, DOE also estimated the peak *dose* for the post-10,000 year period). These projections are based essentially on the best available scientific techniques. DOE focused the assessment of long-term impacts on human health, biological resources, surface-water and groundwater resources, and other resource areas for which the analysis determined the information was particularly important.

The EIS also examined possible biological impacts from the long-term production of heat by the radioactive materials disposed of in Yucca Mountain. The analysis determined that there would be small or no long-term impacts to land use, *noise*, socioeconomic resources, cultural resources, surface-water resources, aesthetics, utilities, or site services from the Proposed Action and limited impacts from the No-Action Alternative, depending on the scenario. The analysis led to the following conclusions:

- From 0.04 to 0.4 square kilometer (10 to 100 acres) of land could be contaminated to the extent it would not be usable for long periods near each of the 77 sites for No-Action Scenario 2. There could be accompanying impacts on biological resources, socioeconomic conditions, cultural resources, and aesthetic resources for long periods. Such impacts for the Proposed Action and No-Action Scenario 1 would be very small.

- For No-Action Scenario 2, there could be low levels of contamination in the surface watershed and high concentrations of contaminants in the groundwater downstream of the 77 sites for long periods. There would be no such impacts for No-Action Scenario 1. For the Proposed Action, there could be very low levels of contamination in the groundwater in the *Amargosa Desert* for a long period.

- Projected radiological impacts to the public for the first 10,000 years for the Proposed Action would be low (about 2×10^{-6} to 3×10^{-4} *latent cancer fatality* per year) compared to No-Action Scenario 2 (3,300 latent cancer fatalities over 10,000 years).

- Radionuclides would be released for a long period of time under the Proposed Action and peak doses would occur about 480,000 years after closure of the repository. The peak mean annual effective *dose equivalent* would be 120 to 150 *millirem*.

- Projected long-term (10,000 years) fatalities associated with No-Action Scenario 1 would be about 1,000, primarily to the workforce at the storage sites.

- Risks associated with sabotage and materials diversion in relation to the fissionable material stored at the 77 sites would be much greater than they would be if the fissionable material were in a monitored deep geologic repository.

The projected cost associated with No-Action Scenario 1 would range from $520 million to $570 million a year (2001 dollars) (see Section 2.2.3) for 9,900 years. Projected long-term costs for the Proposed Action would be very low while there would be none for No-Action Scenario 2 due to the lack of institutional control.

2.4.4 IMPACTS OF TRANSPORTATION SCENARIOS

Table 2-7 summarizes the full range of transportation impacts for the construction, operation and maintenance, and closure of the proposed repository, including the mostly rail and mostly legal-weight truck scenarios and the impacts of constructing and using the Nevada implementing alternatives. This range bounds the transportation-related impacts that could occur. Table 2-8 summarizes health and safety impacts for construction, operation and maintenance, and closure of the repository using the preferred transportation mode of mostly rail nationally and in the State of Nevada.

The following sections address health impacts from the movement of spent nuclear fuel and high-level radioactive waste across the Nation (Section 2.4.4.1) and impacts that could occur in the State of Nevada for the legal-weight truck, rail, and heavy-haul truck implementing alternatives (Section 2.4.4.2). The impacts discussed in both sections are included in Tables 2-7 and 2-8, and are described here to show the comparative difference between the 10 transportation implementing alternatives.

2.4.4.1 National Transportation

This section summarizes and compares national transportation-related environmental impacts for the movement of spent nuclear fuel and high-level radioactive waste from the 77 sites to the Yucca Mountain site. Table 2-9 compares the environmental impacts for the two national transportation scenarios, mostly rail and mostly legal-weight truck (see Section 2.1.3.2). Because DOE does not know the actual mix it would use for these potential national transportation modes, the analyses used these two scenarios to bound the impacts from reasonably expected transportation activities that would move spent nuclear fuel and high-level radioactive waste to the Yucca Mountain site. In addition to national impacts, Table 2-9 includes estimates of the environmental impacts associated with transportation in Nevada.

Table 2-9. National transportation impacts for the transportation of spent nuclear fuel and high-level radioactive waste for the mostly rail and mostly legal-weight truck scenarios.[a,b]

Group	Impact	Mostly legal-weight truck scenario	Mostly rail scenario
Worker	*Incident-free health impacts, radiological*		
	Maximally exposed individual (rem)	48[c]	48[c]
	Individual latent cancer fatality probability	0.02	0.02
	Collective dose (person-rem)	29,000	7,900 - 8,800
	Latent cancer fatality incidence	11.7	3.2 - 3.5[d]
	Industrial safety (fatalities)	0.9	0.29
Public	*Incident-free health impacts, radiological*		
	Average exposed individual (rem)	0.0005	0.0001
	Maximally exposed individual (rem)	2.4[e]	0.29
	Individual latent cancer fatality probability	0.0012	0.00014
	Collective dose (person-rem)	5,000	1,200 - 1,600
	Latent cancer fatality incidence	2.5	0.61 - 0.81
	Incident-free vehicle emissions impacts (fatalities)	0.95	0.55 - 0.77
	Radiological impacts from maximum reasonably foreseeable accident scenario		
	Frequency (per year)	2.3 in 10,000,000	2.8 in 10,000,000
	Maximally exposed individual (rem)	3	29
	Individual latent cancer fatality probability	0.0015	0.015
	Collective dose (person-rem)	1,100	9,900
	Latent cancer fatality incidence	0.55	5
	Accident dose risk (person-rem)	0.46	0.89
	Accident risk (latent cancer fatalities)	0.00023	0.00045
Public and transportation workers	*Fatalities from vehicular accidents*	4.9	2.3 - 3.1

a. The assumed external dose rate is 10 millirem per hour at 2 meters (6.6 feet) from the vehicle for all shipments.
b. Totals for 24 years of operation, including impacts of loading.
c. Based on 2-rem-per-year dose limit.
d. Range for the 10 rail and heavy-haul truck implementing alternatives in Nevada.
e. Based on 100-millirem-per-year dose limit.

As discussed in more detail in Chapter 6, shipments of spent nuclear fuel and high-level radioactive waste to Yucca Mountain would be a small fraction of the overall railroad and highway shipping activity in the United States. Thus, the incremental impacts from shipments to Yucca Mountain for the resource areas would be small in comparison to background impacts from all shipping activities, with the exception of potential radiological impacts.

The following conclusions can be drawn from the analysis results summarized in Table 2-9:

- Radiological impacts from maximum foreseeable accident scenarios during the transportation of spent nuclear fuel and high-level radioactive waste would be lower for the mostly legal-weight truck scenario. The likelihood that such an accident would occur is extremely small for all scenarios.

- Impacts from the transportation of spent nuclear fuel and high-level radioactive waste from the commercial and DOE sites to the Yucca Mountain site would be low for either national shipping mode.

- Radiological impacts to the public and to workers for national transportation activities would be lower for the mostly rail scenario.

2.4.4.2 Nevada Transportation

For shipments coming into the State of Nevada by rail, there is no branch rail line to connect the national rail routes with the Yucca Mountain site (see Section 2.1.3.3). As a consequence, DOE evaluated the

impacts in Nevada of moving spent nuclear fuel and high-level radioactive waste to the site using 10 implementing alternatives. These included five potential corridors for a new branch rail line (see Section 2.1.3.3.2) and five potential combinations of intermodal transfer stations and highway routes for heavy-haul trucks (see Section 2.1.3.3.3).

Tables 2-10 and 2-11 compare the impacts from transportation activities in potential Nevada rail corridors and heavy-haul truck corridors, respectively, and includes the mostly legal-weight truck scenario impacts that would occur in Nevada. In addition, they list the distance of each route. The results include the potential corridor variations in the routes chosen, construction required, and operations. The impacts summarized in Tables 2-10 and 2-11 are based on the impact analyses in Chapter 6, Sections 6.3.1, 6.3.2, and 6.3.3, which delineate the corridor variations. Additional attributes such as cost, institutional acceptability of the route, construction and schedule risk, and operational compatibility could affect a decision on the choice of a transportation mode or route in Nevada.

The following conclusions can be drawn from the information in Tables 2-10 and 2-11:

- Environmental impacts for each of the 10 implementing alternatives would be small.
- With the exception of *collective dose*, the environmental impacts for shipment by legal-weight truck in Nevada would be smaller than those from the 10 implementing alternatives associated with incoming shipments by mostly rail scenario. However, even for shipment by legal-weight truck in Nevada, the projected collective dose impacts would be small (approximately 0.9 latent cancer fatality to both the public and transportation workers) over 24 years.
- With the exception of land use, differences in environmental impacts for the 10 implementing alternatives related to incoming shipments by mostly rail scenario would be small, so environmental impacts do not appear to be a major factor in the selection of transportation mode, route, or corridor in Nevada for incoming rail shipments.
- As much as about 20 square kilometers (4,900 acres) of land would be disturbed for new transportation routes. Three of the rail corridors would encroach on the western and southern boundaries of the Nellis Air Force Range. Of these three, one short segment of the Valley Modified Corridor would not have a variation that could avoid the encroachment. The Caliente-Chalk Mountain Corridor and the Caliente/Chalk Mountain heavy-haul truck route would travel directly through the range. The U.S. Air Force has stated that any route through the Range would have national security implications. Several rail corridors pass through or near Wilderness Study Areas or the proposed Ivanpah Valley Airport. Rail or heavy-haul truck routes could affect the Timbisha Shoshone trust lands, Las Vegas Paiute Reservation, or Moapa Reservation. Some routes could overlap predicted Las Vegas-area growth. Heavy-haul trucks would slow traffic flow.
- Impacts to cultural resources for any of the potential implementing alternative routes or corridors cannot be fully assessed until more detailed archaeological and ethnographic studies are conducted, but they are likely to be similar to one another. Impacts to Native American values could occur from the use of any of the routes including the use by legal-weight trucks of highways in Nevada that would pass through the Moapa and Las Vegas Paiute Indian Reservations.

2.5 Collection of Information and Analyses

DOE conducted a broad range of studies to obtain or evaluate the information needed for the assessment of Yucca Mountain as a monitored geologic repository for spent nuclear fuel and high-level radioactive waste. The Department used the information from these studies in the analyses described in this EIS. Because some of these studies are ongoing, some of the information is incomplete.

Table 2-10. Comparison of impacts for Nevada rail implementing alternatives and for legal-weight truck shipments (page 1 of 2).

Impact	Mostly rail with branch rail					Mostly legal-weight truck
	Caliente	Carlin	Caliente-Chalk Mountain	Jean	Valley Modified	
Corridor length (kilometers)	512 - 553	514 - 544	344 - 382	181 - 204	159 - 163	230 - 270
Land use and ownership						
Disturbed land (square kilometers)[a]	18 - 20	19 - 20	13 - 14	9.2 - 10	5 - 5.2	0
Private land (square kilometers)	0.9 - 2.5	7.3 - 15	0.8 - 1.1	0.1 - 3.5	0 - 0.18	0
Nellis Air Force Range land (square kilometers)	0 - 11	0 - 11	22	0	3.6 - 7.5	0
Tribal	0 - 1.6	0 - 1.6	0	0	0	0
Air quality						
PM_{10} and carbon monoxide (construction and operations)	Areas in attainment of air quality standards - branch rail line not a significant source of pollution	Areas in attainment of air quality standards - branch rail line not a significant source of pollution	Areas in attainment of air quality standards - branch rail line not a significant source of pollution	Except in Clark County, areas in attainment of air quality standards - branch rail line not a significant source of pollution	Clark County is in nonattainment of air quality standards for PM_{10} - branch rail line construction could be a significant source of pollution[b]	Not a significant source of pollution
Hydrology						
Surface water	Low	Low	Low	Low	Low	None
Surface water resources along route	5	6	3	0	0	NA[d]
Flood zones	9	11	At least 3	7	2	NA
Groundwater						
Water use (acre-feet)[c]	710	660	480	410	320	0
Water use (number of wells)	64	67	43	23	20	0
Biological resources and soils	Low	Low	Low	Low	Low	Very low
Cultural resources	None identified to archaeological, historical, or cultural resources	None identified to archaeological, historical, or cultural resources	None identified to archaeological, historical, or cultural resources	None identified to archaeological, historical, or cultural resources	None identified to archaeological or historical resources. Route passes close to the Las Vegas Paiute Indian Reservation	Since shipments would use existing highways, none to archaeological or historical resources. Shipments from the northeast would pass through the Moapa Indian Reservation. All shipments would pass through the Las Vegas Paiute Indian Reservation
Noise	Moderate	Low	Moderate	Moderate	Moderate	Low
Utilities and resources						
Diesel (million liters)[e]	45	41	36	30	14	Very low
Gasoline (thousand liters)	940	840	680	570	280	
Steel (thousand metric tons)[f]	78	75	52	29	23	0
Concrete (thousand metric tons)[g]	460	420	310	170	130	0

Table 2-10. Comparison of impacts for Nevada rail implementing alternatives and for legal-weight truck shipments (page 2 of 2).

Impact	Mostly rail with branch rail					Mostly legal-weight truck
	Caliente	Carlin	Caliente-Chalk Mountain	Jean	Valley Modified	
Aesthetics	Very low	Very low	Very low	Potential small area of conflict	Very low	None
Socioeconomics						
New jobs (percent of workforce in affected counties	840 (< 1% - 3.2%)	780 (< 1%)	650 (<1% - 2.3%)	530 (< 1%)	250 (< 1%)	Very low
Peak real disposable income (million dollars)	24	21	19	15	7	Very low
Peak incremental Gross Regional Product (million dollars)	40	36	31	26	13	Very low
Waste management	Limited quantity	Limited quantity	Limited quantity	Limited quantity	Limited quantity	Very low
Environmental justice (disproportionately high and adverse impacts)	None	None	None	None	None	None
Incident-free health and safety						
Industrial hazards						
Total recordable incidents	220	200	180	150	110	NA
Lost workday cases	110	100	90	80	60	NA
Fatalities	0.43	0.41	0.38	0.3	0.25	NA
Collective dose (person-rem [LCFs])						
Workers	850 [0.34]	980 [0.39]	740 [0.3]	760 [0.3]	710 [0.28]	1,900 [0.75]
Public	19 [0.009]	38 [0.019]	50 [0.025]	130 [0.06]	23 [0.012]	340 [0.17]
Fatalities from vehicle emissions	0.25	0.25	0.2	0.23	0.13	0.086
Accident impacts, nonradiological traffic						
Construction and operations workforce	1.9	1.8	1.5	1.2	0.9	NA
SNF[h] and HLW[i] shipping	0.07	0.09	0.05	0.06	0.05	0.49
Accident impacts, radiological						
Radiological accident risk						
Person-rem	0.002	0.003	0.002	0.007	0.002	0.053
Latent cancer fatalities	0.0000009	0.0000013	0.0000009	0.0000036	0.000001	0.000026
Maximum reasonably foreseeable accident						
Maximally exposed individual (rem)	29	29	29	29	29	0.3
Individual latent cancer fatality probability	0.014	0.014	0.014	0.014	0.014	0.0015
Collective dose (person-rem)	9,900	9,900	9,900	9,900	9,900	1,100
Latent cancer fatalities	4.9	4.9	4.9	4.9	4.9	0.55

a. Convert square kilometers to acres, multiply by 247.1.
b. To convert acre-feet to gallons, multiply by 325,850.1.
c. To convert liters to gallons, multiply by 0.26418.
d. To convert metric tons to tons, multiply by 1.1023.
e. To convert cubic feet to cubic meters, multiply by 0.028317.
f. NA = not applicable.
g. SNF = spent nuclear fuel.
h. HLW = high-level radioactive waste.
i. Conformity analysis may be required (see Chapter 3, Sections 3.1.2.1 and 3.2.2.1.2).

Table 2-11. Comparison of impacts for Nevada heavy-haul truck implementing alternatives and for legal-weight truck shipments (page 1 of 3).

Impact	Mostly rail with heavy-haul truck					Mostly legal-weight truck
	Caliente	Caliente/Chalk Mountain	Caliente/Las Vegas	Sloan/Jean	Apex/Dry Lake	
Corridor length (kilometers)	530	280	380	190	180	230 - 270
Land use and ownership						
Disturbed land (square kilometers)[a]	3.4	1.3	2.1	0.63	0.63	0
Private land (square kilometers)	0	0	0	0	0	0
Nellis Air Force Range land (square kilometers)	0	0	0	0	0	0
Air quality						
PM_{10} and carbon monoxide (construction and operations)	Areas in attainment of air quality standards - not a significant source of pollution	Areas in attainment of air quality standards - not a significant source of pollution	Clark County is in nonattainment of air quality standards - heavy-haul route construction could be a significant source of pollution[b]	Except in Clark County, areas in attainment of air quality standards - not a significant source of pollution	Except in Clark County, areas in attainment of air quality standards - not a significant source of pollution	Not a significant source of pollution
Hydrology						
Surface water	Low	Low	Low	Low	Low	None
Groundwater						
Water use (acre-feet)[c]	100	60	44	8	8	0
Water use (number of wells)	16	5	7	Truck water	Truck water	0
Biological resources and soils	Low	Low	Low	Low	Low	Very low
Cultural resources	None identified to archaeological, historical, or cultural resources	None identified to archaeological, historical, or cultural resources	None identified to archaeological, historical, or cultural resources; route near Moapa Indian Reservation and passes across 1.6-kilometer (1-mile) corner of the Las Vegas Paiute Indian Reservation	None identified to archaeological, historical, or cultural resources; route passes across 1.6-kilometer (1-mile) corner of the Las Vegas Paiute Indian Reservation	None identified to archaeological, historical, or cultural resources; IMT[d] and route near the Moapa Indian Reservation and passes across 1.6-kilometer (1-mile) corner of the Las Vegas Paiute Indian Reservation	Since shipments would use existing highways, none to archaeological or historical resources. Shipments from the northeast would pass through the Moapa Indian Reservation. All shipments would pass through the Las Vegas Paiute Indian Reservation
Noise	Low	Low	Low	Low	Low	Low
Utilities and resources						
Diesel (million liters)[e]	13	4.7	5.5	1.7	1.6	Very low
Steel (metric tons)[f]	49	14	21	2.3	2.3	0
Concrete (thousand metric tons)[g]	1.8	0.5	0.8	0.1	0.1	0
Aesthetics	Some potential near Caliente	Some potential near Caliente	Some potential near Caliente	Very low	Very low	None

Table 2-11. Comparison of impacts for Nevada heavy-haul truck implementing alternatives and for legal-weight truck shipments (page 2 of 3).

Impact	Mostly rail with heavy-haul truck					Mostly legal-weight truck
	Caliente	Caliente/Chalk Mountain	Caliente/Las Vegas	Sloan/Jean	Apex/Dry Lake	
Socioeconomics						
New jobs (percent of workforce in affected counties)	860 (< 1% - 3.3%)	750 (< 1% - 4.9%)	590 - 1,980 (< 1% - 3.3%)	630 - 3,050 (< 1%)	490 - 1,880 (< 1%)	Very low
Peak real disposable personal income (million dollars)	27	22	19 - 65	21 - 97	16 - 62	Very low
Peak incremental Gross Regional Product (million dollars)	45	40	33 - 104	36 - 153	29 - 100	Very low
Waste management	Limited quantity	Limited quantity	Limited quantity	Limited quantity	Limited quantity	Very low
Environmental justice (disproportionately high and adverse impacts)	None	None	None	None	None	None
Incident-free health and safety						
Industrial hazards						
Total recordable incidents	310	270	260	150	150	NA[h]
Lost workday cases	160	140	140	80	80	NA
Fatalities	0.72	0.68	0.63	0.37	0.37	NA
Collective dose (person-rem [LCFs])						
Workers	1,600 [0.65]	1,200 [0.50]	1,400 [0.56]	1,200 [0.48]	1,100 [0.46]	1,900 [0.75]
Public	76 [0.038]	61 [0.030]	220 [0.11]	300 [0.15]	160 [0.08]	340 [0.17]
Fatalities from vehicle emissions	0.47	0.32	0.46	0.42	0.29	0.086
Accident impacts, nonradiological traffic						
Construction and operations workforce	3.5	2.4	3.0	1.7	1.7	NA
SNF[i] and HLW[j] shipping	0.6	0.33	0.43	0.25	0.23	0.49
Accident impacts, radiological						
Radiological accident risk						
Person-rem	0.01	0.002	0.056	0.12	0.056	0.053
Latent cancer fatalities	0.0000051	0.000001	0.000028	0.00006	0.000028	0.000026

Table 2-11. Comparison of impacts for Nevada heavy-haul truck implementing alternatives and for legal-weight truck shipments (page 3 of 3).

Impact	Mostly rail with heavy-haul truck					Mostly legal-weight truck
	Caliente	Caliente/Chalk Mountain	Caliente/Las Vegas	Sloan/Jean	Apex/Dry Lake	
Maximum reasonably foreseeable accident						
Maximally exposed individual (rem)	29	29	29	29	29	3
Individual latent cancer fatality probability	0.014	0.014	0.014	0.014	0.014	0.0015
Collective dose (person-rem)	9,900	9,900	9,900	9,900	9,900	1,100
Latent cancer fatalities	4.9	4.9	4.9	4.9	4.9	0.55

a. To convert square kilometers to acres, multiply by 247.1.
b. To convert acre-feet to gallons, multiply by 325,850.1.
c. IMT = intermodal transfer.
d. To convert liters to gallons, multiply by 0.26418.
e. To convert metric tons to tons, multiply by 1.1023.
f. To convert cubic feet to cubic meters, multiply by 0.028317.
g. NA = not applicable.
h. SNF = spent nuclear fuel.
i. HLW = high-level radioactive waste.
j. Conformity analysis may be required (see Chapter 3, Sections 3.1.2.1 and 3.2.2.1.2).

The complexity and variability of the natural system at Yucca Mountain, the long periods evaluated, and factors such as the use of incomplete information or the unavailability of information have resulted in a certain degree of uncertainty associated with the analyses and findings in this EIS. DOE believes that it is important that the EIS identify the use of incomplete and unavailable information and uncertainty to enable an understanding of its findings. It is also important to understand that research can produce results or conclusions that might disagree with other research. The interpretation of results and conclusions has resulted in the development of views that differ from those that DOE presents in this EIS. DOE has received input from a number of organizations interested in the Proposed Action or No-Action Alternative or from potential recipients of impacts from those actions. These organizations include among others the State of Nevada, local governments, and Native American tribes. Their input includes documents that present research or information that in some cases disagrees with the views that DOE presents in this EIS. The Department reviewed these documents and evaluated their findings for inclusion as part of the EIS analyses. If the information represents a substantive view, DOE has made every effort to incorporate that view in the EIS and to identify its source.

2.5.1 INCOMPLETE OR UNAVAILABLE INFORMATION

Some of the analyses in this EIS had to use incomplete information. To ensure an understanding of the status of its information, DOE has identified the use of incomplete information or the unavailability of information in the EIS in accordance with the Council on Environmental Quality regulations pertaining to incomplete and unavailable information (40 CFR 1502.22). Such cases describe the basis for the analyses, including assumptions, the use of preliminary information, or conclusions from draft or incomplete studies. DOE continues to study issues relevant to understanding what could happen in the future at Yucca Mountain and the potential impacts associated with its use as a repository. As a result, this Final EIS includes information that was not available for the Draft EIS. DOE believes that sufficient information is currently available to assess the range of impacts that could result from either the Proposed Action or the No-Action Alternative.

2.5.2 UNCERTAINTY

The results and conclusions of analyses often have some associated uncertainty. The uncertainty could be the result of the assumptions used, the complexity and variability of the process being analyzed, the use of incomplete information, or the unavailability of information. To enable an understanding of the status of its findings, this EIS contains descriptions of the uncertainties, if any, associated with the results and conclusions presented. Chapter 5, Section 5.2.4 provides further description of uncertainties associated with estimating long-term impacts.

2.5.3 OPPOSING VIEWS

In this EIS, opposing views are defined as differing views or opinions currently held by organizations or individuals outside DOE. These views are considered to be opposing if they include or rely on data or methods that DOE is not currently using in its own impact analysis. In addition, these views are reasonably based on scientific, regulatory, or other information supported by credible data or methods that relate to the impacts analyzed in the EIS.

DOE has attempted to identify and address the range of opposing views in this EIS. The Department identified potential opposing views by reviewing public comments received during the EIS comment period, as well as, published or other information in the public domain. Sources of information included reports from universities, other Federal agencies, the State of Nevada, counties, municipalities, other local

governments, and Native American tribes. DOE reviewed the potential opposing views to determine if they:

- Address issues analyzed in the EIS
- Differ from the DOE position
- Are based on scientific, regulatory, or other information supported by credible data or methods that relate to the impacts analyzed in the EIS
- Have significant basic differences in the data or methods used in the analysis or to the impacts described in the EIS

DOE has included potential opposing views that met the above criteria in the EIS where it discusses the particular subject. For example, opposing views on the groundwater system are discussed in the sections on groundwater.

2.5.4 PERCEIVED RISK AND STIGMA

During the scoping process for the Draft EIS, commenters requested DOE to evaluate the potential impacts that could arise from risk perception and stigma associated with the construction and operation of a repository at Yucca Mountain and from the transportation of spent nuclear fuel and high-level radioactive waste. Commenters stated that negative perceptions of the repository and associated transportation would result in substantial adverse socioeconomic impacts, particularly in Nevada.

PERCEIVED RISK AND STIGMA

DOE uses the term risk perception to mean how an individual perceives the amount of risk from a certain activity. Studies show that perceived risk varies with certain factors, such as whether the exposure to the activity is voluntary, the individual's degree of control over the activity, the severity of the exposure, and the timing of the consequences of the exposure.

DOE uses stigma to mean an undesirable attribute that blemishes or taints an area or locale.

In considering the request to evaluate the impacts of risk perception and stigma, DOE recognized that nuclear facilities can be perceived to be either positive or negative, depending on the underlying value systems of the individual forming the perception. Thus, perception-based impacts would not necessarily depend on the actual physical impacts or risk of repository operations, including transportation. A further complication is that people do not consistently act in accordance with negative perceptions, and thus the connection between public perception of risk and future behavior would be uncertain or speculative at best. For these reasons, DOE concluded that including analyses of perception-based and stigma-related impacts in the Draft EIS would not provide meaningful information.

Comments on the Draft EIS and Supplement to the Draft EIS once again raised the issue of risk perception and stigma. In response, DOE examined relevant studies and literature on perceived risk and stigmatization of communities to determine whether the state of the science in predicting future behavior based on perceptions had advanced sufficiently since scoping to allow DOE to quantify the impact of public risk perception on economic development or property values in affected communities. Of particular interest were those scientific and social studies carried out in the past few years that directly relate to either Yucca Mountain or to DOE actions, such as the transportation of foreign research reactor fuel (see Appendix N). DOE also reexamined the conclusions of previous literature reviews, such as that conducted in 1995 by the Nuclear Waste Technical Review Board.

After completing its review, DOE concluded that, although public perception regarding the proposed geologic repository and transportation of spent nuclear fuel and high-level radioactive waste could be measured, there is no valid method to translate these perceptions into quantifiable economic impacts. Researchers in the social sciences have not found a way to reliably forecast linkages between perceptions or attitudes reported in surveys and actual future behavior. Based on the current limitations in forecasting future behavior attributable to risk perception or stigma, there is a consensus among social scientists that a quantitative assessment of economic impacts from risk perception and stigma is impossible at this time. At best, only a *qualitative* assessment is possible about what broad outcomes seem most likely.

Qualitatively, in the absence of a large accident or a continuing series of smaller accidents, there is little reason to expect that negative perceptions about repository operations are likely to engender adverse effects (see Appendix N). Likewise, absent accidents, there is no reason to expect that risk perceptions would impact property values in areas beyond the transportation corridors. Some studies (DIRS 156055-UER 2001, all; DIRS 156003-Gawande and Jenkins-Smith 2001, all) report that, at least temporarily, a small relative decline in residential property values might result from the designation of transportation corridors in urban areas, even in the absence of accidents. Other transportation experiences (for example, transportation of *transuranic waste* to the Waste Isolation Pilot Plant) suggest that impacts on property values might be negligible or nonexistent.

Based on the general research to date on perceptions and future behavior, and research related specifically to a Yucca Mountain repository, other nuclear facilities, and transportation of spent nuclear fuel and high-level radioactive waste, DOE has concluded that:

- While in some instances risk perceptions could result in adverse impacts on portions of a local economy, there are no reliable methods whereby such impacts could be quantified with any degree of certainty.
- Much of the uncertainty is irreducible.
- Based on a qualitative analysis, adverse impacts from perceptions of risk would be unlikely or relatively small.

While stigmatization of southern Nevada can be envisioned under some scenarios, it is not inevitable or numerically predictable. Any such stigmatization would likely be an aftereffect of unpredictable future events, such as serious accidents, which may not occur. Consequently, DOE did not attempt to quantify any potential for impacts from risk perceptions or stigma in this EIS.

The studies and literature reviewed are referenced in a report included in Appendix N, *Are Fear and Stigmatization Likely, and How Do They Matter? Lessons from Research on the Likelihood of Adverse Socioeconomic Impacts from Public Perceptions of the Yucca Mountain Repository* by Dr. Robert O'Connor.

2.6 Preferred Alternative

DOE's preferred alternative is to proceed with the Proposed Action to construct, operate and monitor, and eventually close a geologic repository for the disposal of spent nuclear fuel and high-level radioactive waste at Yucca Mountain. The analyses in this EIS did not identify any potential environmental impacts that would be the basis for not proceeding with the Proposed Action. Further, DOE has identified mostly rail as its preferred mode of transportation, both nationally and in the State of Nevada.

DOE recognizes that implementation of the Proposed Action would require the completion of a number of actions. As part of this process, the Secretary of Energy is to:

- Undertake (and complete) site characterization activities at Yucca Mountain to provide information and data required to evaluate the site.

- Determine whether to recommend approval of the development of a geologic repository at Yucca Mountain to the President.

If the Secretary recommends the Yucca Mountain site to the President, the NWPA requires that a comprehensive statement of the basis for the recommendation, including this Final EIS, accompany the recommendation. DOE has prepared this Final EIS so the Secretary can consider it, including the public input on the Draft EIS and on the Supplement to the Draft EIS and other information described below, in making a determination on whether to recommend the site to the President. The NWPA also requires DOE to hold hearings to provide the public in the vicinity of Yucca Mountain with opportunities to comment on the Secretary's possible recommendation of the Yucca Mountain site to the President. If, after completing the hearings and site characterization activities, the Secretary made a determination to recommend that the President approve the site, the Secretary would notify the Governor and Legislature of the State of Nevada accordingly. No sooner than 30 days after the notification, the Secretary would submit the recommendation to the President to approve the site for development of a repository.

If, after a recommendation by the Secretary, the President considered the site qualified for application to the Nuclear Regulatory Commission for a construction authorization, the President would submit a recommendation of the site to Congress. The Governor or Legislature of Nevada may object to the site by submitting a notice of disapproval to Congress within 60 days of the President's action. If neither the Governor nor the Legislature submitted such a notice within the 60-day period, the site designation would become effective without further action by the President or Congress. If, however, the Governor or the Legislature did submit such a notice, the site would be disapproved unless, during the first 90 days of continuous session of Congress after the notice of disapproval, Congress passed a joint resolution of repository siting approval and the President signed it into law.

In determining whether to recommend the Yucca Mountain site to the President, the Secretary would consider not only the potential environmental impacts identified in this EIS, but other information designated in Section 114 of the NWPA. These include, for example, a description of the proposed repository, preliminary engineering specifications for the facility, a description of the proposed waste form, an explanation of the relationship between the proposed waste form or packaging and geologic medium of the site, a discussion of the site characterization data that relates to the safety of the site, preliminary comments of the Nuclear Regulatory Commission concerning the sufficiency of information for inclusion in any Departmental license application, and the views and comments of the Governor and Legislature of any State or the governing body of any affected Native American tribe.

As part of the Proposed Action, which DOE has identified as its preferred alternative, the EIS analyzes the potential impacts of transporting spent nuclear fuel and high-level radioactive waste to the Yucca Mountain site from 77 sites across the United States. This analysis includes information on such matters as the comparative impacts of truck and rail transportation nationally and in Nevada, as well as impacts in Nevada of alternative intermodal (rail-to-truck) transfer stations associated routes for heavy-haul trucks and alternative corridors for a branch rail line. The analysis did not identify any potential environmental impacts that would be a basis for not transporting spent nuclear fuel and high-level radioactive waste to the Yucca Mountain site.

DOE believes that the EIS provides the environmental impact information necessary to make certain broad transportation-related decisions, namely the choice of a national mode of transportation outside

Nevada (mostly rail or mostly legal-weight truck), the choice among alternative transportation modes in Nevada (mostly rail, mostly legal-weight truck, or heavy-haul truck with use of an associated intermodal transfer station), and the choice among alternative rail corridors or heavy-haul truck routes with use of an associated intermodal transfer station in Nevada.

DOE has identified mostly rail as it preferred mode of transportation, both nationally and in Nevada. The environmental impacts for mostly rail are expected to be less overall than the impacts for mostly truck. For the mostly rail scenario, 9,600 rail and 1,100 truck shipments are expected for shipping 70,000 MTHM and, for the mostly truck scenario, 53,000 truck and 300 rail shipments are expected. The reduced number of shipments to move 70,000 MTHM and corresponding expected reduction in environmental impacts are the basis for preferring the mostly rail scenario.

NONPREFERRED ALTERNATIVES

DOE has identified the Caliente-Chalk Mountain rail corridor and heavy-haul truck route as "nonpreferred alternatives." The U.S. Air Force has stated that it knows of no route across the Nellis Air Force Range (now known as the Nevada Test and Training Range) that would avoid militarily sensitive areas and not affect the heavy volume of testing and training that occurs daily. Therefore, the Air Force believes that such a route would be inconsistent with the national security uses of the Range.

At this time, DOE has not identified a preference for a specific rail corridor in Nevada. If the Yucca Mountain site was approved, DOE would identify such a preference in consultation with affected stakeholders, particularly the State of Nevada. In that case, DOE would announce its preferred corridor in Nevada in a *Federal Register* notice. Following the *Federal Register* notice, DOE would publish its decision to select a corridor in a Record of Decision no sooner than 30 days after the announcement of a preference. However, follow-on implementing decisions, such as selection of a specific rail alignment in a corridor, would require additional field surveys, state and local government consultations, Native American tribal consultations, environmental and engineering analyses, and National Environmental Policy Act reviews.

REFERENCES

Note: In an effort to ensure consistency among Yucca Mountain Project documents, DOE has altered the format of the references and some of the citations in the text in this Final EIS from those in the Draft EIS. The following list contains notes where applicable for references cited differently in the Draft EIS.

154554 BSC 2001 — BSC (Bechtel SAIC Company) 2001. *Lower-Temperature Subsurface Layout and Ventilation Concepts.* ANL-WER-MD-000002 REV 00. Las Vegas, Nevada: Bechtel SAIC Company. ACC: MOL.20010718.0225.

104795 CRWMS M&O 1995 — CRWMS M&O (Civilian Radioactive Waste Management System Management & Operating Contractor) 1995. *Nevada Potential Repository Preliminary Transportation Strategy Study 1.* B00000000-01717-4600-00023 REV 01. Las Vegas, Nevada: CRWMS M&O. ACC: MOL.19960729.0195. In the Draft EIS, this reference was cited as TRW 1995a in Chapter 12.

101214	CRWMS M&O 1996	CRWMS M&O (Civilian Radioactive Waste Management System Management & Operating Contractor) 1996. *Nevada Potential Repository Preliminary Transportation Strategy Study 2.* B00000000-01717-4600-00050 REV 01. Two volumes. Las Vegas, Nevada: CRWMS M&O. ACC: MOL.19960724.0199; MOL.19960724.0200. In the Draft EIS, this reference was cited as TRW 1996 in Chapter 12.
104849	CRWMS M&O 1997	CRWMS M&O (Civilian Radioactive Waste Management System Management & Operating Contractor) 1997. *Intermodal Transfer Station Preliminary Design.* BCBI00000-01717-0200-00007 REV 00. Las Vegas, Nevada: CRWMS M&O. ACC: MOL.19980303.0029. In the Draft EIS, this reference was cited as TRW 1997d in Chapter 12.
154448	CRWMS M&O 1998	CRWMS M&O (Civilian Radioactive Waste Management System Management & Operating Contractor) 1998. *Road Upgrades for Heavy Haul Truck Routes.* BCBI00000-01717-0200-00008 REV 00. Las Vegas, Nevada: CRWMS M&O. ACC: MOL.19981207.0254.
154816	CRWMS M&O 1998	CRWMS M&O (Civilian Radioactive Waste Management System Management & Operating Contractor) 1998. *Yucca Mountain Project Transportation EIS Maps, IMT Maps.* BCB100000-01717-0200-00007 REV 00. Las Vegas, Nevada: CRWMS M&O. ACC: MOL.19981207.0252.
102030	CRWMS M&O 1999	CRWMS M&O (Civilian Radioactive Waste Management System Management & Operating Contractor) 1999. *Waste Package Final Update to EIS Engineering File.* BBA000000-01717-5705-00019 REV 01. Las Vegas, Nevada: CRWMS M&O. ACC: MOL.19990330.0530. In the Draft EIS, this reference was cited as TRW 1999c in Chapter 12.
104508	CRWMS M&O 1999	CRWMS M&O (Civilian Radioactive Waste Management System Management & Operating Contractor) 1999. *Repository Surface Design Engineering Files Report.* BCB000000-01717-5705-00009 REV 03. Las Vegas, Nevada: CRWMS M&O. ACC: MOL.19990615.0238. In the Draft EIS, this reference was cited as TRW 1999a in Chapter 12.
104523	CRWMS M&O 1999	CRWMS M&O (Civilian Radioactive Waste Management System Management & Operating Contractor) 1999. *Engineering File - Subsurface Repository.* BCA000000-01717-5705-00005 REV 02 DCN 01. Las Vegas, Nevada: CRWMS M&O. ACC: MOL.19990621.0157; MOL.19990615.0230. In the Draft EIS, this reference was cited as TRW 1999b in Chapter 12.
104593	CRWMS M&O 1999	CRWMS M&O (Civilian Radioactive Waste Management System Management & Operating Contractor) 1999. *Environmental Baseline File for Biological Resources.* B00000000-01717-5700-00009 REV 00. Las Vegas, Nevada: CRWMS M&O. MOL.19990302.0181; MOL.19990330.0560. In the Draft EIS, this reference was cited as TRW 1999k in Chapter 12.

107292	CRWMS M&O 1999	CRWMS M&O (Civilian Radioactive Waste Management System Management & Operating Contractor) 1999. *License Application Design Selection Report.* B00000000-01717-4600-00123 REV 01 ICN 01. Las Vegas, Nevada: CRWMS M&O. ACC: MOL.19990908.0319.
150941	CRWMS M&O 2000	CRWMS M&O (Civilian Radioactive Waste Management System Management & Operating Contractor) 2000. *FEIS Update to Engineering File - Subsurface Repository.* TDR-EBS-MD-000007 REV 00 ICN 01. Las Vegas, Nevada: CRWMS M&O. ACC: MOL.20000612.0058.
152010	CRWMS M&O 2000	CRWMS M&O (Civilian Radioactive Waste Management System Management & Operating Contractor) 2000. *Repository Surface Design Engineering Files Report Supplement.* TDR-WHS-EV-000001 REV 00 ICN 1. Las Vegas, Nevada: CRWMS M&O. ACC: MOL.20000626.0025.
104832	DOE 1980	DOE (U.S. Department of Energy) 1980. *Final Environmental Impact Statement Management of Commercially Generated Radioactive Waste.* DOE/EIS-0046F. Three volumes. Washington, D.C.: U.S. Department of Energy, Office of Nuclear Waste Management. ACC: HQZ.19870302.0183; HQZ.19870302.0184; HQZ.19870302.0185.
101779	DOE 1998	DOE (U.S. Department of Energy) 1998. *Viability Assessment of a Repository at Yucca Mountain.* DOE/RW-0508. Overview and five volumes. Washington, D.C.: U.S. Department of Energy, Office of Civilian Radioactive Waste Management. ACC: MOL.19981007.0027; MOL.19981007.0028; MOL.19981007.0029; MOL.19981007.0030; MOL.19981007.0031; MOL.19981007.0032.
153255	DOE 2001	DOE (U.S. Department of Energy) 2001. *Analysis of the Total System Life Cycle Cost of the Civilian Radioactive Waste Management Program.* DOE/RW-0533. Washington, D.C.: U.S. Department of Energy, Office of Civilian Radioactive Waste Management. ACC: MOL.20010802.0217.
153849	DOE 2001	DOE (U.S. Department of Energy) 2001. *Yucca Mountain Science and Engineering Report.* DOE/RW-0539. [Washington, D.C.]: U.S. Department of Energy, Office of Civilian Radioactive Waste Management. ACC: MOL.20010524.0272.
155982	DOE 2001	DOE (U.S. Department of Energy) 2001. *Site Characterization Progress Report: Yucca Mountain, Nevada.* Number 23. [Washington, D.C.]: U.S. Department of Energy, Office of Civilian Radioactive Waste Management. ACC: MOL.20010412.0099.
156899	DOE 2001	DOE (U.S. Department of Energy) 2001. *Cost Escalation and Interest Rates.* TDR-CRW-SE-000019 REV 00. Washington, D.C.: Bechtel SAIC Co., LLC. ACC: MOV.20011106.0002.

156900	DOE 2001	DOE (U.S. Department of Energy) 2001. *Life Cycle Cost Analysis for Repository Flexible Design Concepts.* TDR-CRW-SE-000017 REV 00. Washington, D.C.: Bechtel SAIC Co., LLC. ACC: MOL.20011120.0951.
104877	ETS 1989	ETS (ETS Pacific) 1989. *Evaluate Alternative Rail Corridor Routes Through Lincoln Co., NV to Yucca Mountain, NV.* Portland, Oregon: ETS Pacific. ACC: NNA.19890828.0036.
156003	Gawande and Jenkins-Smith 2001	Gawande, K. and Jenkins-Smith, H. 2001. "Nuclear Waste Transport and Residential Property Values: Estimating the Effects of Perceived Risks." *Journal of Environmental Economics and Management, 42,* (2), 207-233. [New York, New York]: Academic Press. TIC: 250822.
153882	Griffith 2001	Griffith, G.W. 2001. "Repository Surface Design Engineering Files Letter Report – MGR Solar Power System (Revision 2)." Letter from G.W. Griffith (CRWMS M&O) to D. Kane (DOE/YMSCO) and K. Skipper (DOE/YMSCO), February 5, 2001, LV.SFD.GWG.02/01-010, with enclosure. ACC: MOL.20010320.0365.
155929	Jason 1999	Jason (Jason Technologies) 1999. *Reference Cost Report for Continued Storage.* Las Vegas, Nevada: Jason Technologies. ACC: MOL.20010719.0350.
104782	Kelderhouse 1999	Kelderhouse, S. 1999. "LWT, HH and Rail Transportation Graphics." E-mail from S. Kelderhouse to R. Best (CRWMS M&O), April 27, 1999, with attachment. ACC: MOL.19990526.0027.
152007	Mattsson 2000	Mattsson, C.G. 2000. "Repository Surface Design Engineering Files Letter Report - Non-Boiling Repository Surface Facilities Conceptual Design." Letter from C.G. Mattsson (CRWMS M&O) to K.J. Skipper (DOE/YMSCO), July 21, 2000, LV.SFD.CGM.7/00-058, with enclosure. ACC: MOL.20000828.0028.
152003	McKenzie 2000	McKenzie, D.G., III 2000. "Environmental Impact Statement (EIS) Supplemental Information." Letter from D.G. McKenzie III (CRWMS M&O) to K.J. Skipper (DOE/YMSCO), July 13, 2000, LV.SSDS.DGM.07/00-029, with enclosures. ACC: MOL.20000828.0026.
100061	National Research Council 1990	National Research Council 1990. *Rethinking High-Level Radioactive Waste Disposal, A Position Statement of the Board on Radioactive Waste Management.* Washington, D.C.: National Academy Press. TIC: 205153.
100018	National Research Council 1995	National Research Council 1995. *Technical Bases for Yucca Mountain Standards.* Washington, D.C.: National Academy Press. TIC: 217588.

101899	NRC 1996	NRC (U.S. Nuclear Regulatory Commission) 1996. *Generic Environmental Impact Statement for License Renewal of Nuclear Plants, Main Report, Final Report.* NUREG-1437, Vol. 1. Washington, D.C.: U.S. Nuclear Regulatory Commission. TIC: 233963.
101910	Poe 1998	Poe, W.L., Jr. 1998. *Long-Term Degradation of Concrete Facilities Presently Used for Storage of Spent Nuclear Fuel and High-Level Waste.* Revision 1. Las Vegas, Nevada: Jason Technologies. TIC: 244048.
156055	UER 2001	UER (Urban Environmental Research) 2001. *Property Value Impacts from the Shipment of High-Level Nuclear Waste through Clark County, Nevada.* Scottsdale, Arizona: Urban Environment Research, LLC. TIC: 250920.
101941	USN 1996	USN (U.S. Department of the Navy) 1996. *Department of the Navy Final Environmental Impact Statement for a Container System for the Management of Naval Spent Nuclear Fuel.* DOE/EIS-0251. [Washington, D.C.]: U.S. Department of Energy. TIC: 227671.
104792	YMP 1990	YMP (Yucca Mountain Site Characterization Project) 1990. *Preliminary Rail Access Study.* YMP/89-16. Las Vegas, Nevada: Yucca Mountain Site Characterization Office. ACC: MOL.19980817.0094. In the Draft EIS, this reference was cited as TRW 1999d in Chapter 12.
104737	YMP 1997	YMP (Yucca Mountain Site Characterization Project) 1997. *Location of Alternative Heavy-Haul Routes and Future Las Vegas Beltway.* YMP-97-262.0. Las Vegas, Nevada: Yucca Mountain Site Characterization Office. ACC: MOL.19990610.0306. In the Draft EIS, this reference was cited as DOE 1997c in Chapter 12.
104560	YMP 1998	YMP (Yucca Mountain Site Characterization Project) 1998. *Potential Rail Alignments.* YMP/98-104.0. Las Vegas, Nevada: Yucca Mountain Site Characterization Office. ACC: MOL.19990526.0034. In the Draft EIS, this reference was cited as DOE 1998f in Chapter 12.
104588	YMP 1998	YMP (Yucca Mountain Site Characterization Project) 1998. *Nevada Routes for Heavy-Haul Truck Shipments of SNF and HLW to Yucca Mountain.* YMP/97-263.9. Las Vegas, Nevada: Yucca Mountain Site Characterization Office. ACC: MOL.19990526.0035. In the Draft EIS, this reference was cited as DOE 1998g in Chapter 12.
104743	YMP 1998	YMP (Yucca Mountain Site Characterization Project) 1998. *Nevada Routes for Legal-Weight Truck Shipments of SNF and HLW to Yucca Mountain.* YMP/97-310.3. Las Vegas, Nevada: Yucca Mountain Site Characterization Office. ACC: MOL.19990526.0033. In the Draft EIS, this reference was cited as DOE 1998d in Chapter 12.

104853 YMP 1998 YMP (Yucca Mountain Site Characterization Project) 1998. *Potential Rail Corridors.* YMP/98-179.0. Las Vegas, Nevada: Yucca Mountain Site Characterization Office. ACC: MOL.19990526.0032. In the Draft EIS, this reference was cited as DOE 1998e in Chapter 12.